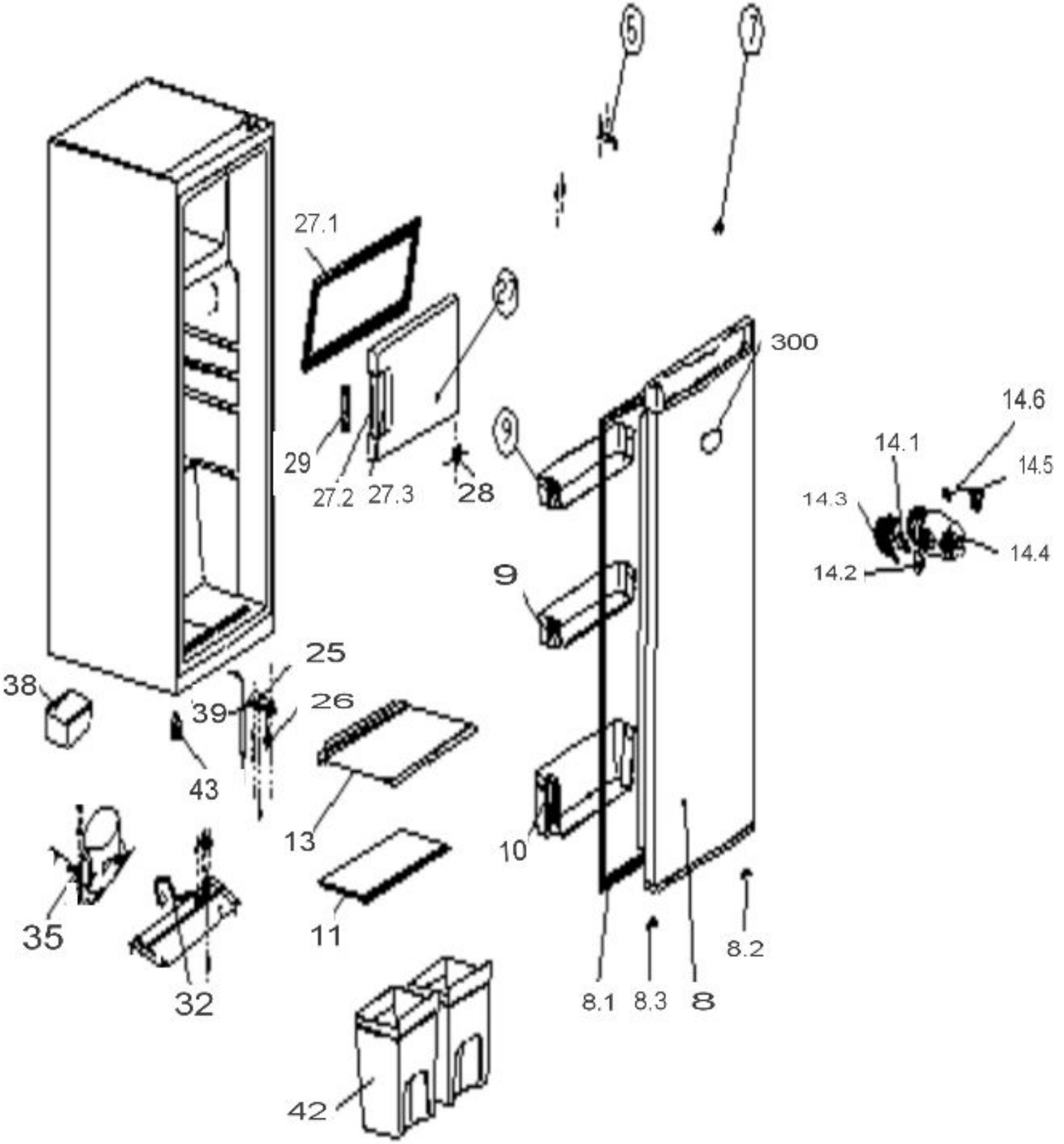
5
7
27.1
2
300
14.6
14.1
14.5
14.3
14.4
14.2
29
27.2
27.3
28
9
9
25
38
39
26
43
13
10
35
11
32
8.2
8.1
8.3
8
42