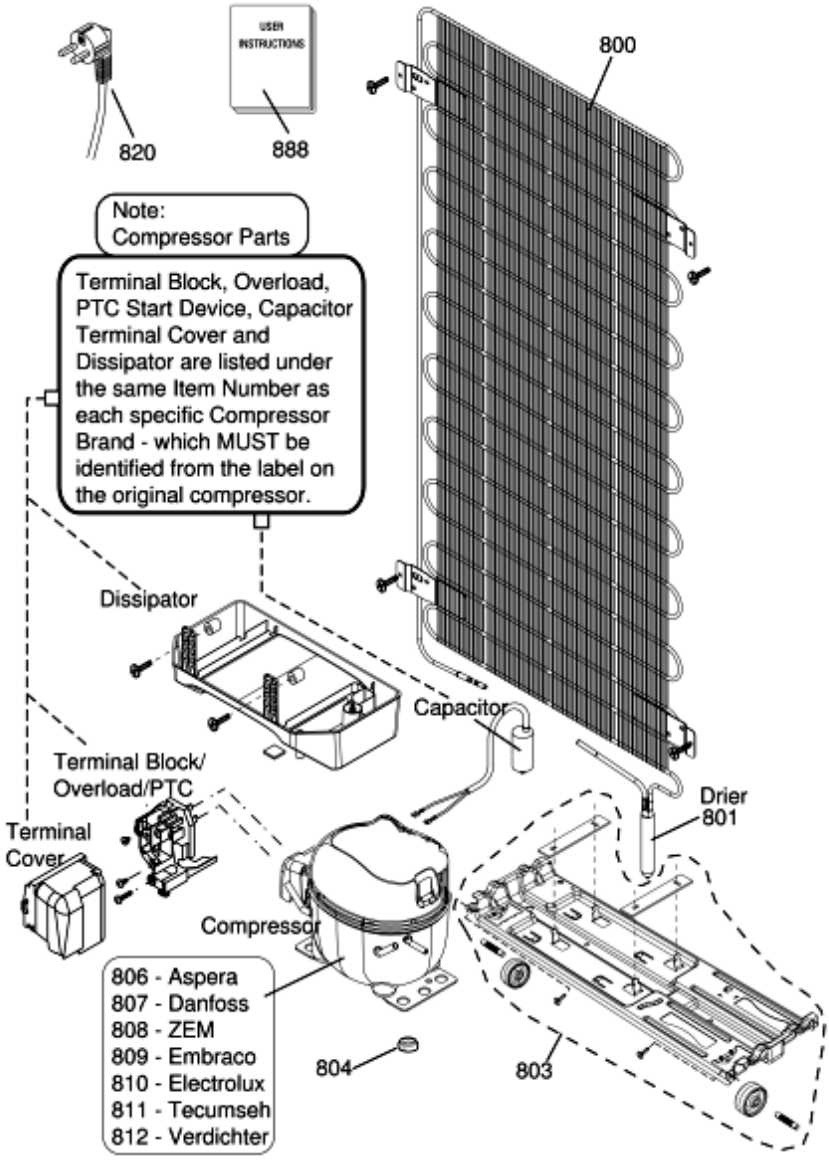
USER INSTRUCTIONS
820
888
800
Note:
Compressor Parts
Terminal Block, Overload, PTC Start Device, Capacitor Terminal Cover and Dissipator are listed under the same Item Number as each specific Compressor Brand - which MUST be identified from the label on the original compressor.
Dissipator
Capacitor
Terminal Block/ Overload/PTC
Terminal Cover
Drier
801
Compressor
806 - Aspera
807 - Danfoss
808 - ZEM
809 - Embraco
810 - Electrolux
811 - Tecumseh
812 - Verdichter
804
803

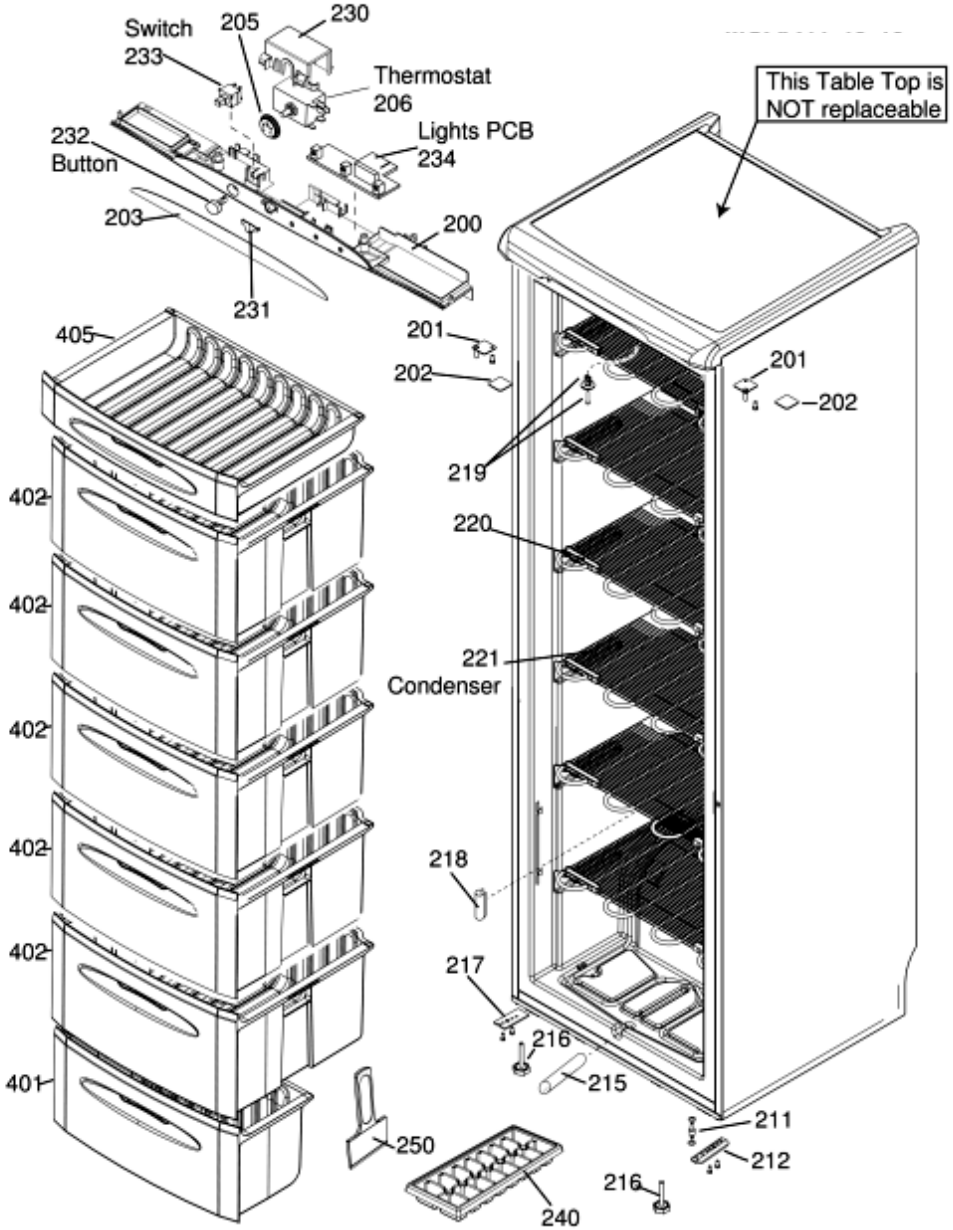
Switch
233
205
230
Thermostat
206
Lights PCB
234
232
Button
203
200
231
This Table Top is
NOT replaceable
405
201
202
201
202
219
402
220
402
221
Condenser
402
402
218
402
217
216
401
215
211
250
212
216
240

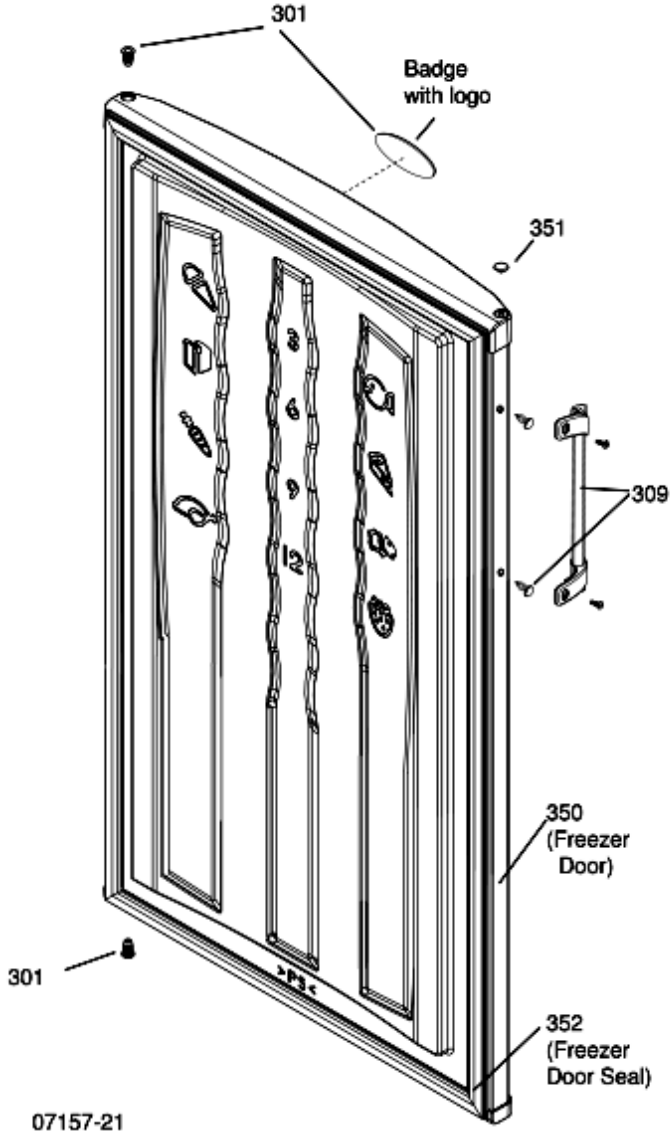
301
Badge
with logo
351
309
350
(Freezer
Door)
301
352
(Freezer
Door Seal)
07157-21