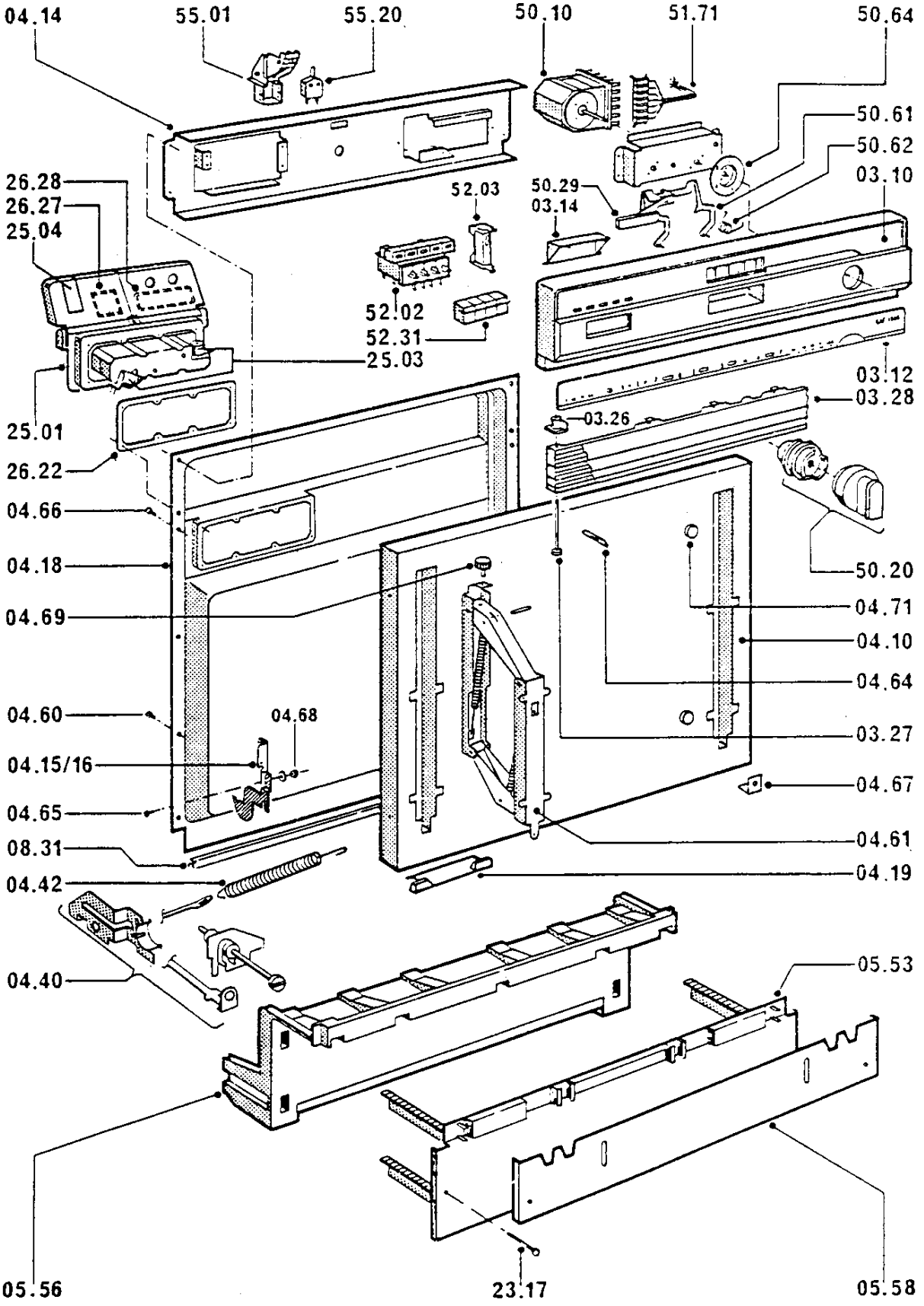
04.14
55.01
55.20
50.10
51.71
50.64
50.61
50.62
03.10
26.28
26.27
25.04
52.03
50.29
03.14
52.02
52.31
25.03
03.12
03.28
03.26
25.01
26.22
04.66
04.18
04.69
50.20
04.71
04.10
04.64
04.60
04.68
03.27
04.15/16
04.67
04.65
04.61
08.31
04.42
04.19
04.40
05.53
05.56
23.17
05.58

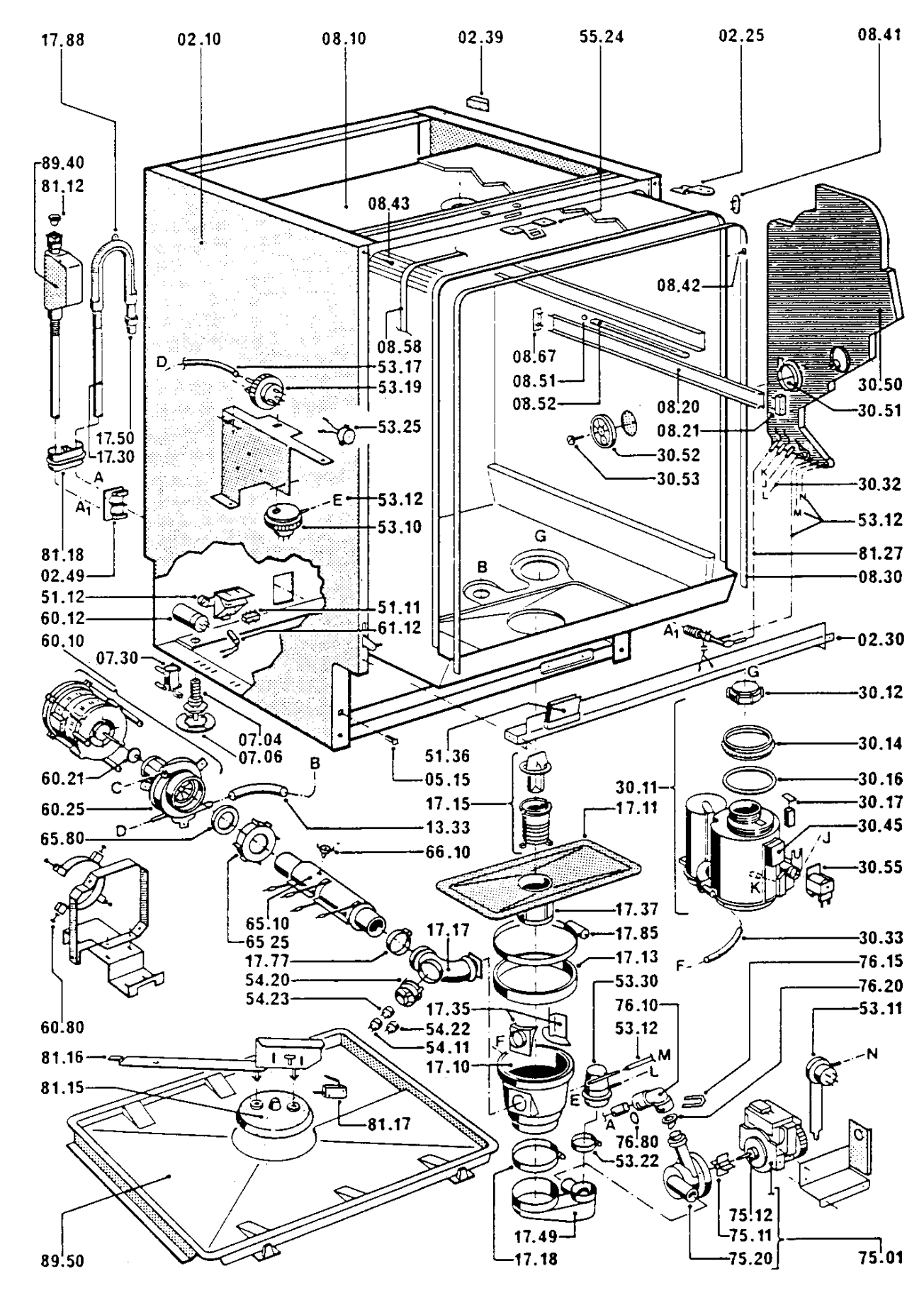
17.88
02.10
08.10
02.39
55.24
02.25
08.41
89.40
81.12
08.43
08.42
08.58
08.67
08.51
08.52
08.20
08.21
30.50
30.51
30.52
30.53
30.32
53.12
81.27
08.30
D
53.17
53.19
53.25
17.50
17.30
A
A1
E
53.12
53.10
81.18
02.49
G
B
51.12
60.12
51.11
61.12
A1
02.30
60.10
07.30
07.04
07.06
51.36
05.15
G
30.12
30.14
30.16
30.17
30.45
30.55
30.11
60.21
C
60.25
D
65.80
B
13.33
17.15
17.11
66.10
J
M
K
30.33
F
65.10
65 25
17.77
54.20
54.23
17.17
17.37
17.85
17.13
53.30
76.10
53.12
M
L
E
A
76.80
53.22
76.15
76.20
53.11
N
60.80
81.16
81.15
81.17
17.35
54.22
54.11
17.10
F
17.49
17.18
75.12
75.11
75.20
75.01
89.50

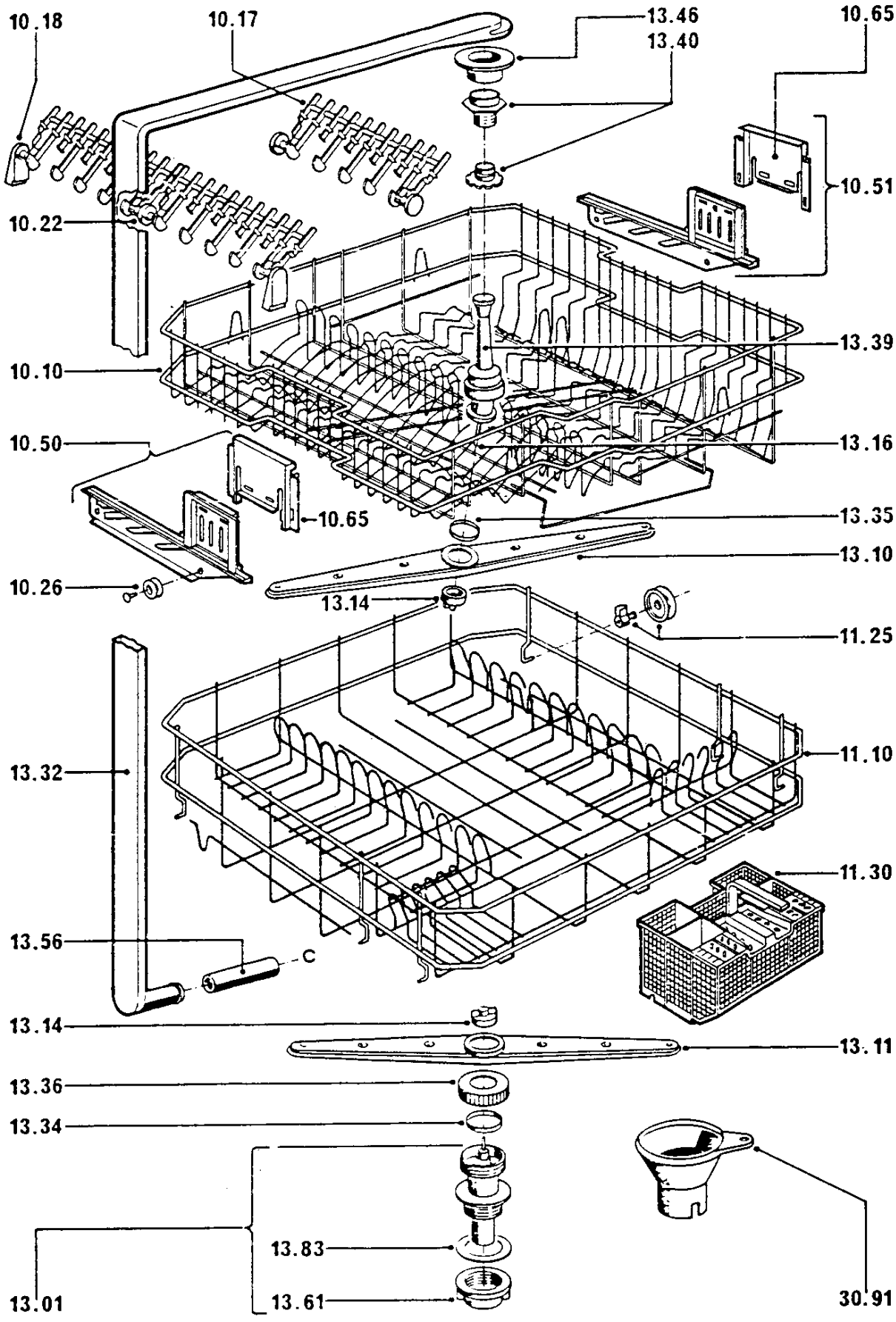
10.18
10.17
13.46
13.40
10.65
10.51
10.22
13.39
10.10
10.50
13.16
10.65
13.35
13.10
10.26
13.14
11.25
13.32
11.10
11.30
13.56
C
13.14
13.11
13.36
13.34
13.83
13.01
13.61
30.91