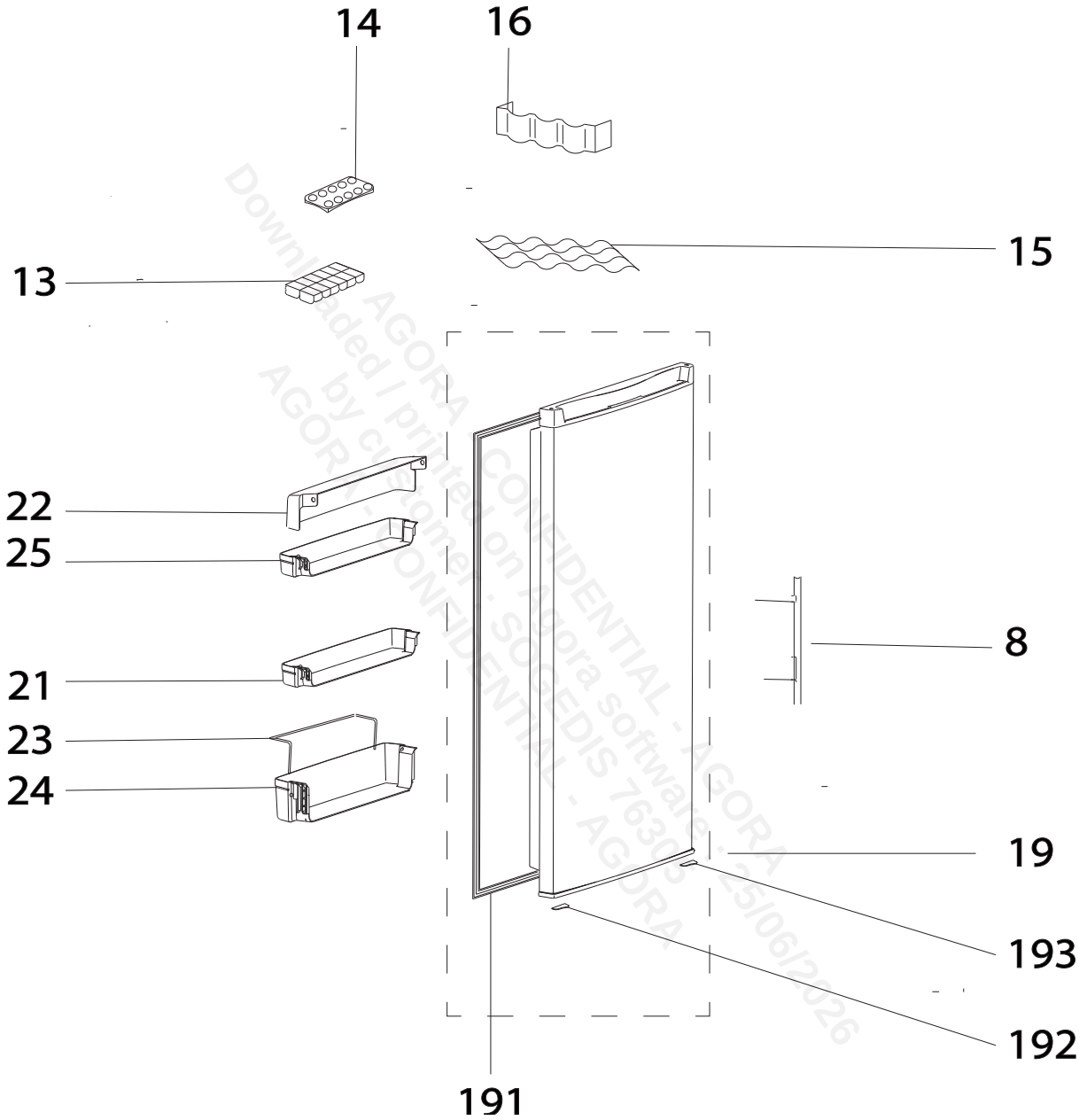

Downloaded / printed on Agora software by customer SOCEDIS 76305 - 25/06/2026
AGORA - CONFIDENTIAL - AGORA - CONFIDENTIAL - AGORA

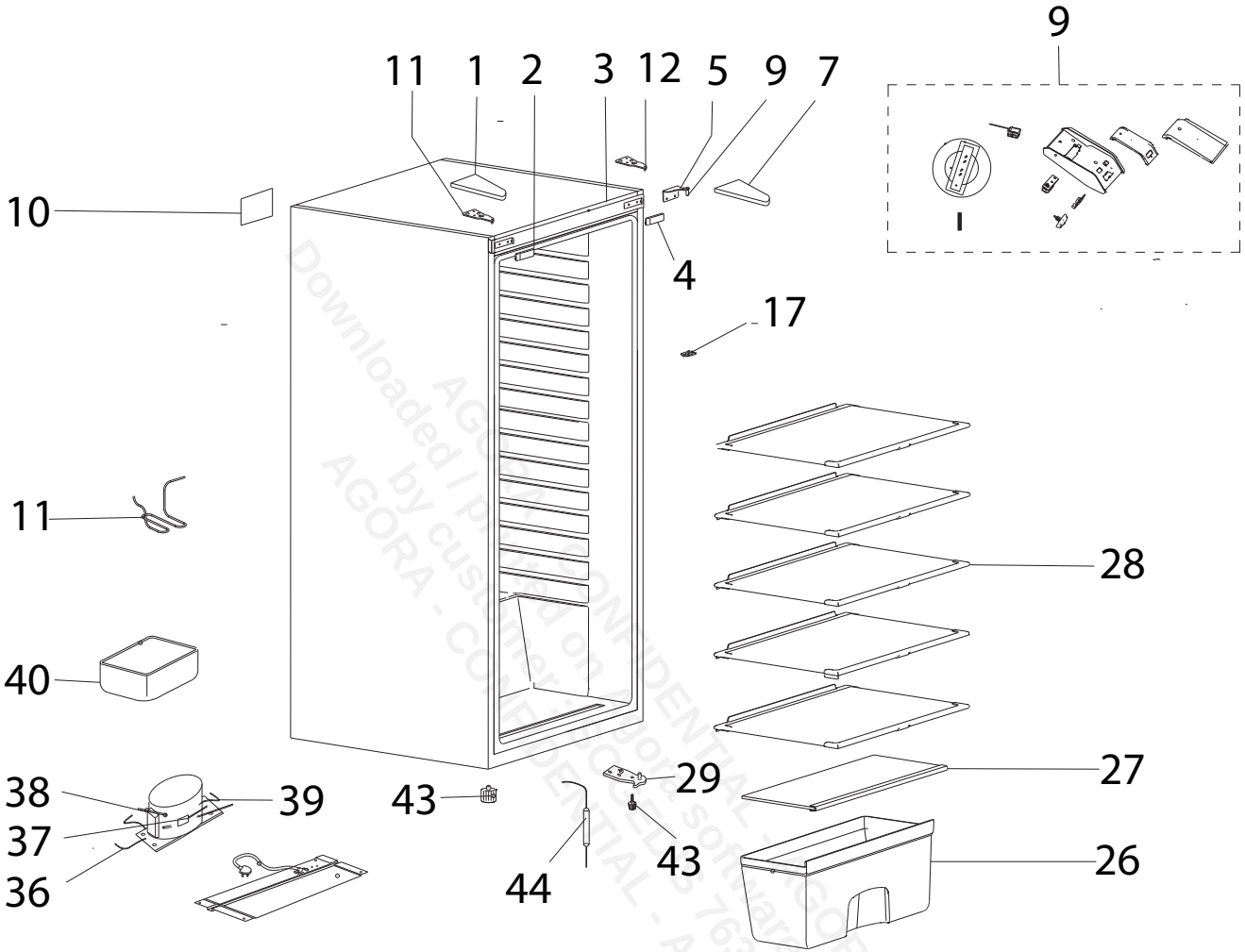

Downloaded / printed on AGORA software : 25/0
by customer 76305
AGORA - CONFIDENTIAL - AGORA - CONFIDENTIAL - AGORA