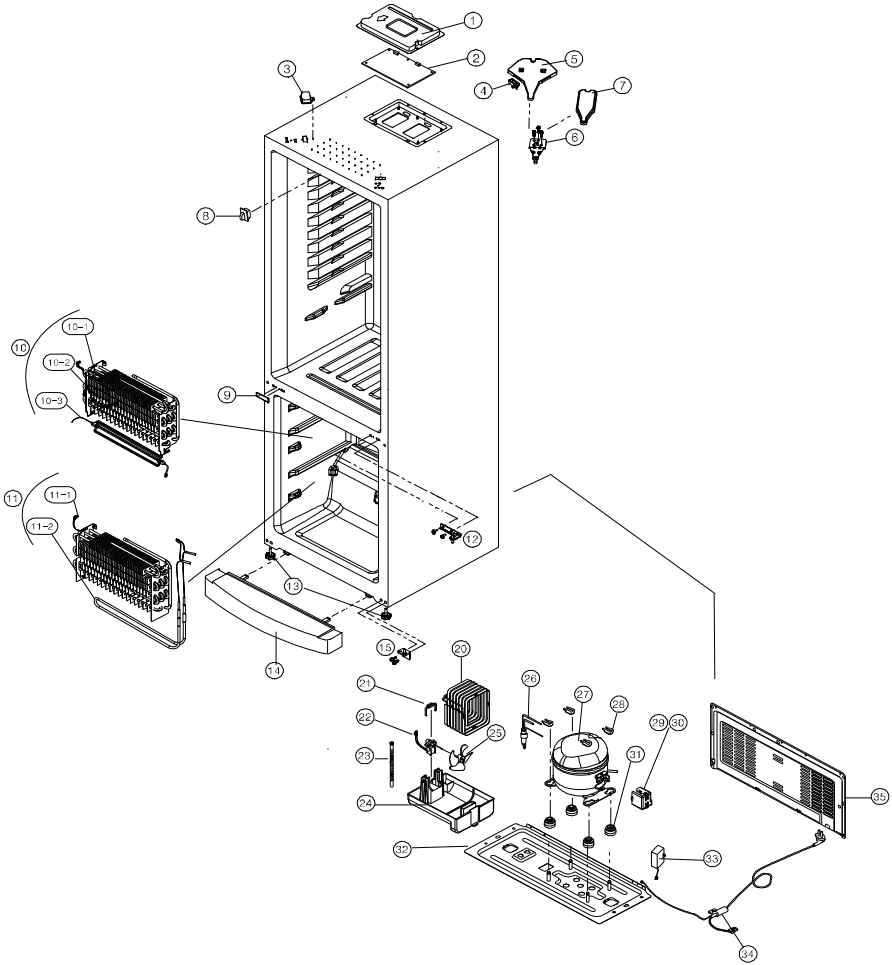
1
2
3
4
5
6
7
8
9
10
10-1
10-2
10-3
11
11-1
11-2
12
13
14
15
20
21
22
23
24
25
26
27
28
29
30
31
32
33
34
35

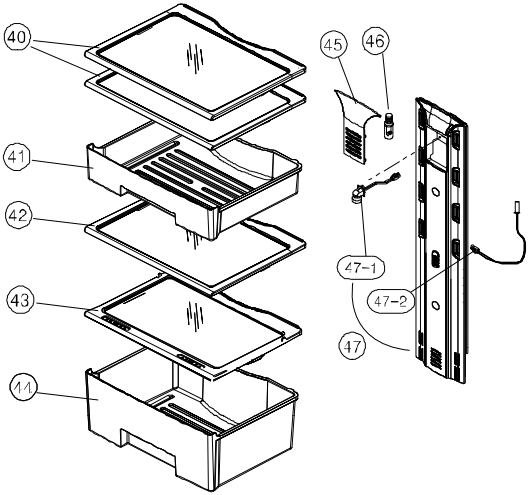
40
41
42
43
44
45
46
47-1
47-2
47

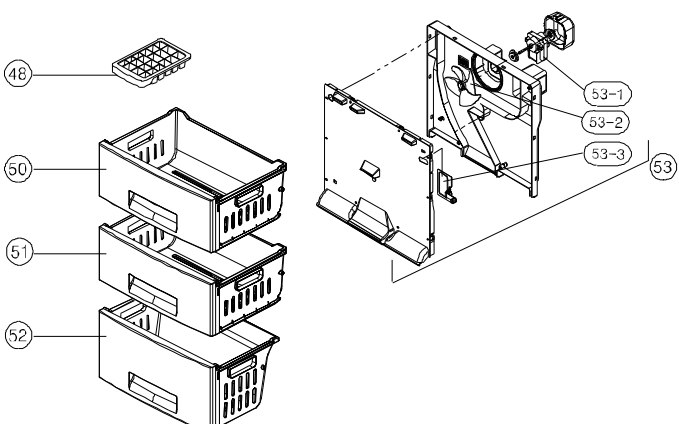
48
50
51
52
53-1
53-2
53-3
53

MODEL : 421N..

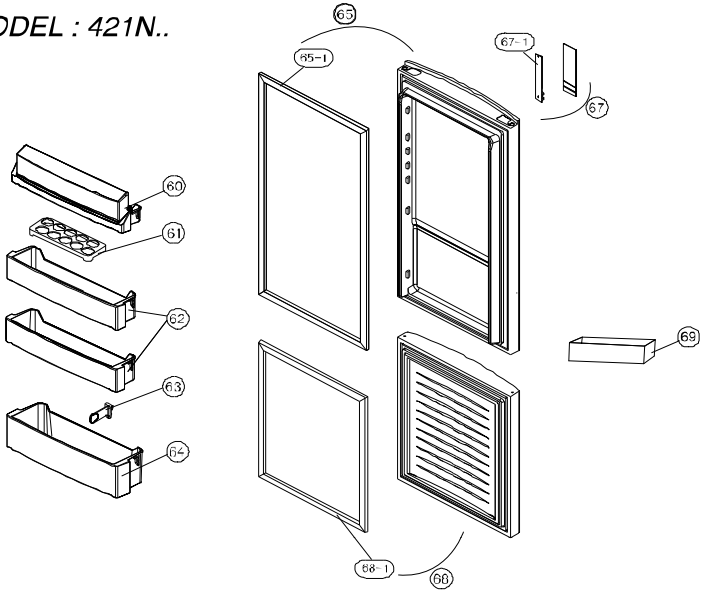
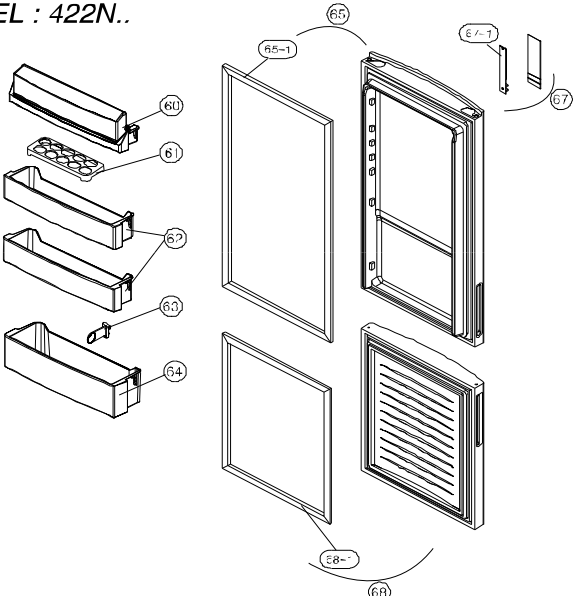
MODEL : 422N..