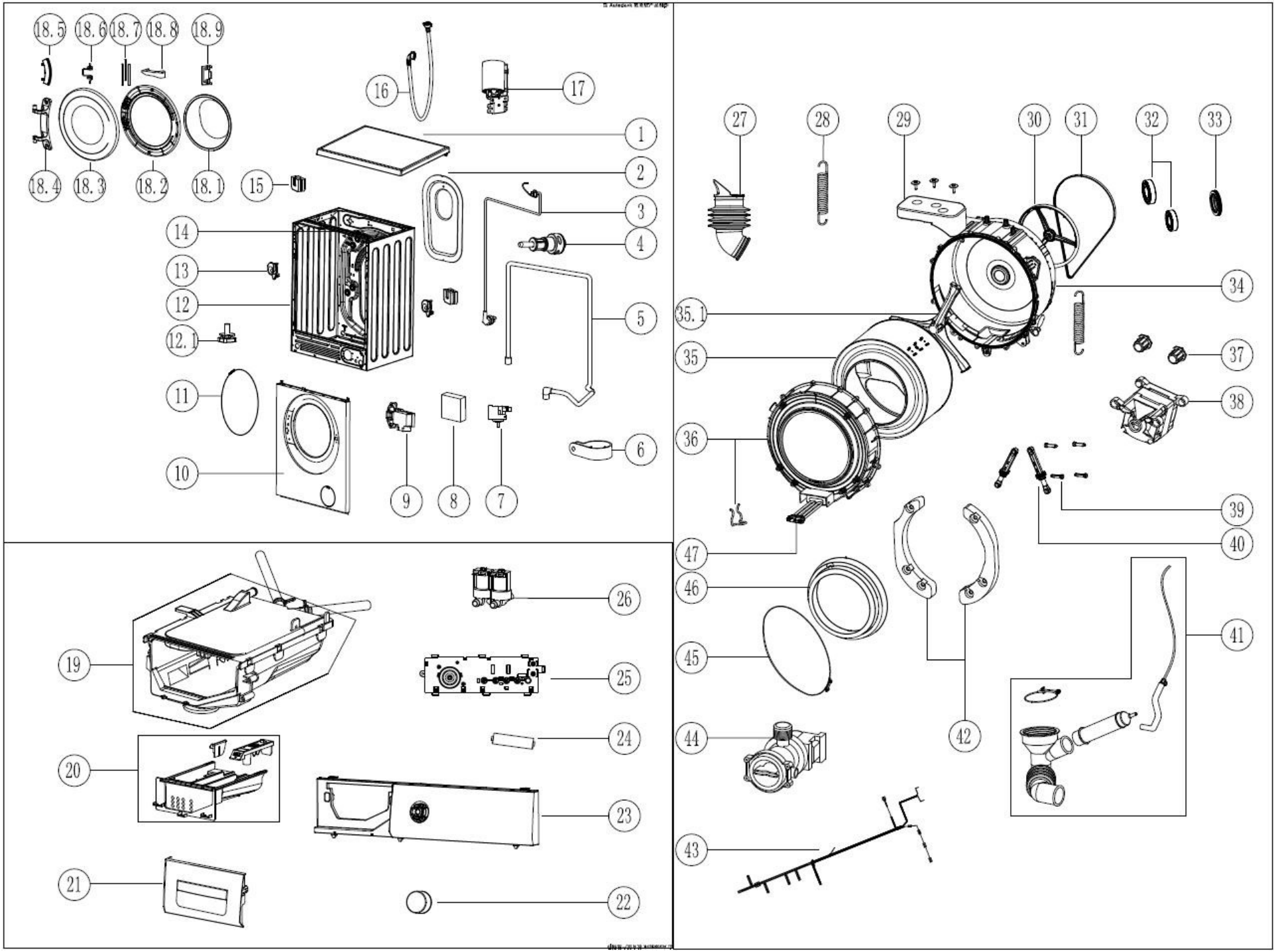
18.5
18.6
18.7
18.8
18.9
18.4
18.3
18.2
18.1
16
17
1
2
15
3
14
4
13
12
5
12.1
11
6
10
9
8
7
27
28
29
30
31
32
33
34
35.1
35
37
38
36
39
40
47
46
41
45
42
44
43
26
19
25
24
20
23
21
22