# Ref. No : GR-439**K(J)*

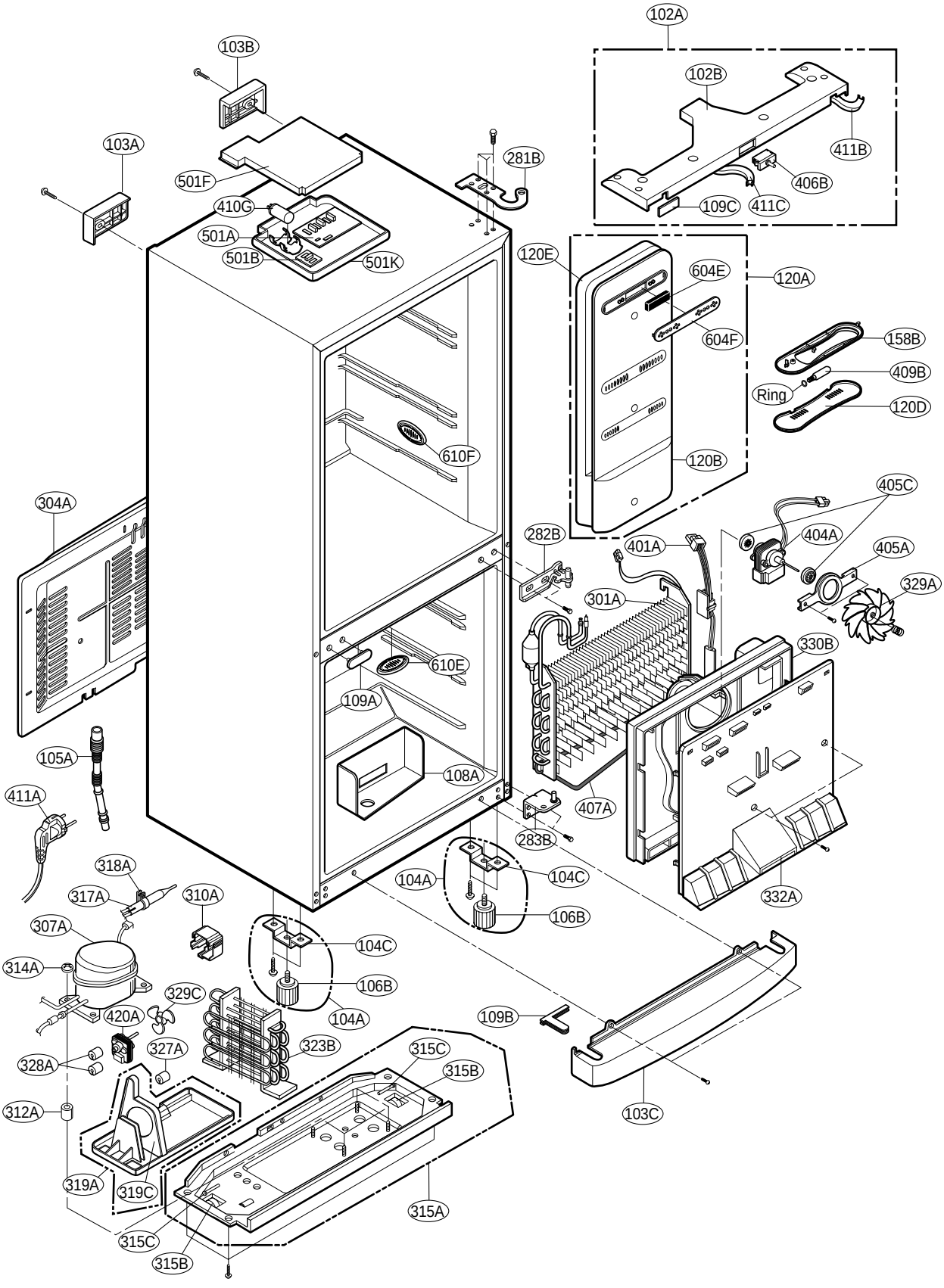

# Ref. No : GR-439**R(Q)*

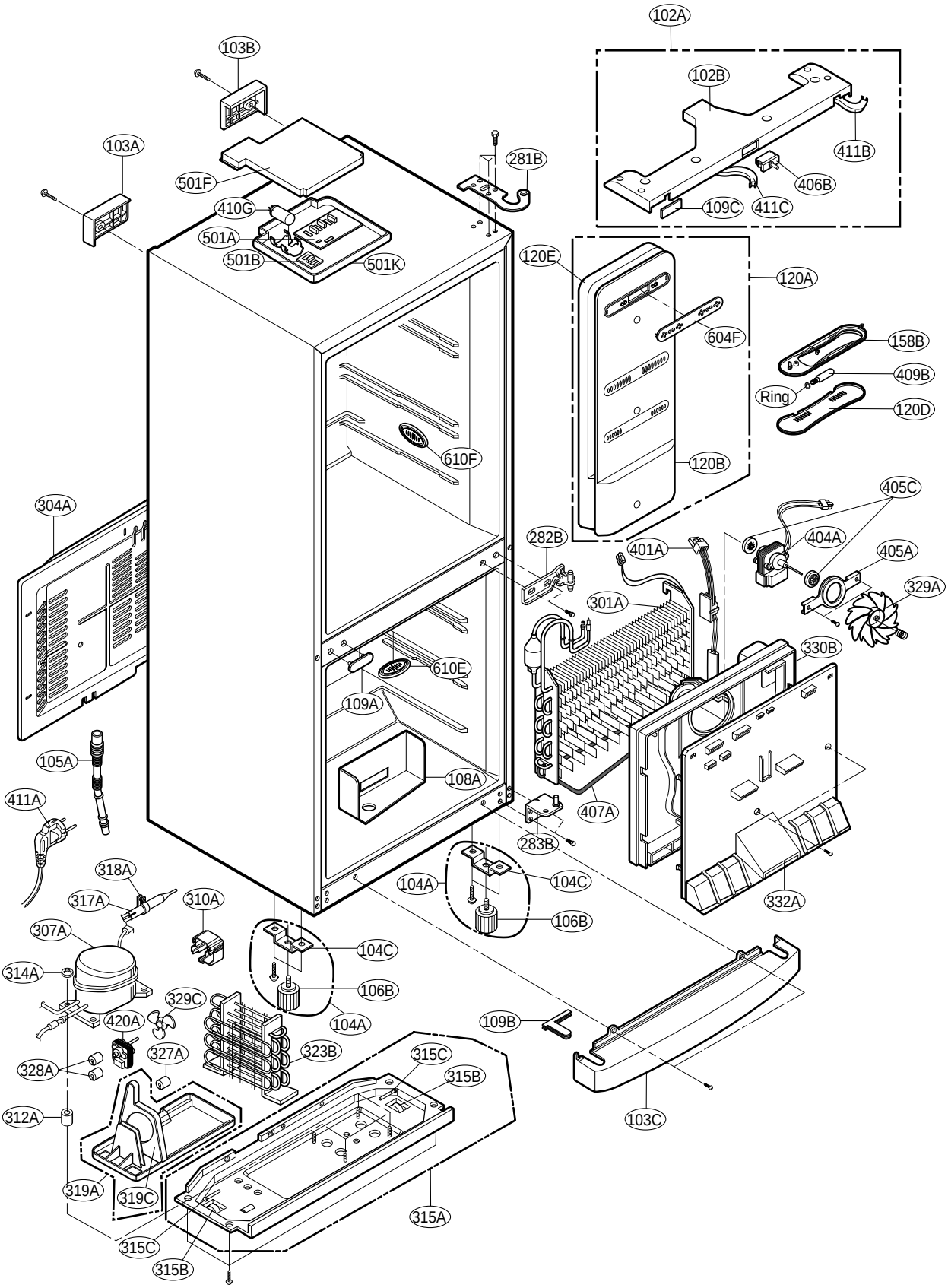

# Ref. No : GR-439**C*

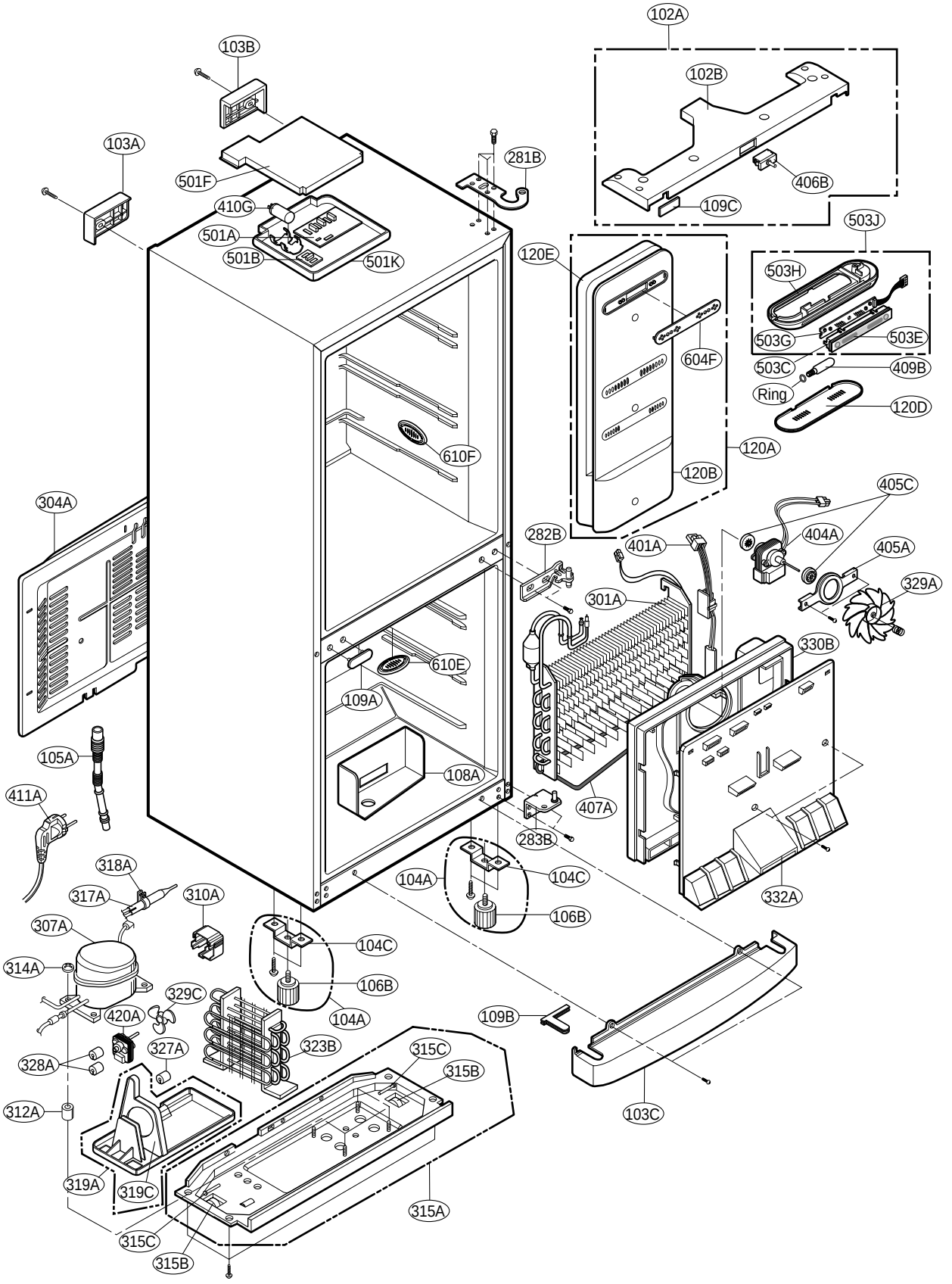

# Ref. No : GR-439**K*

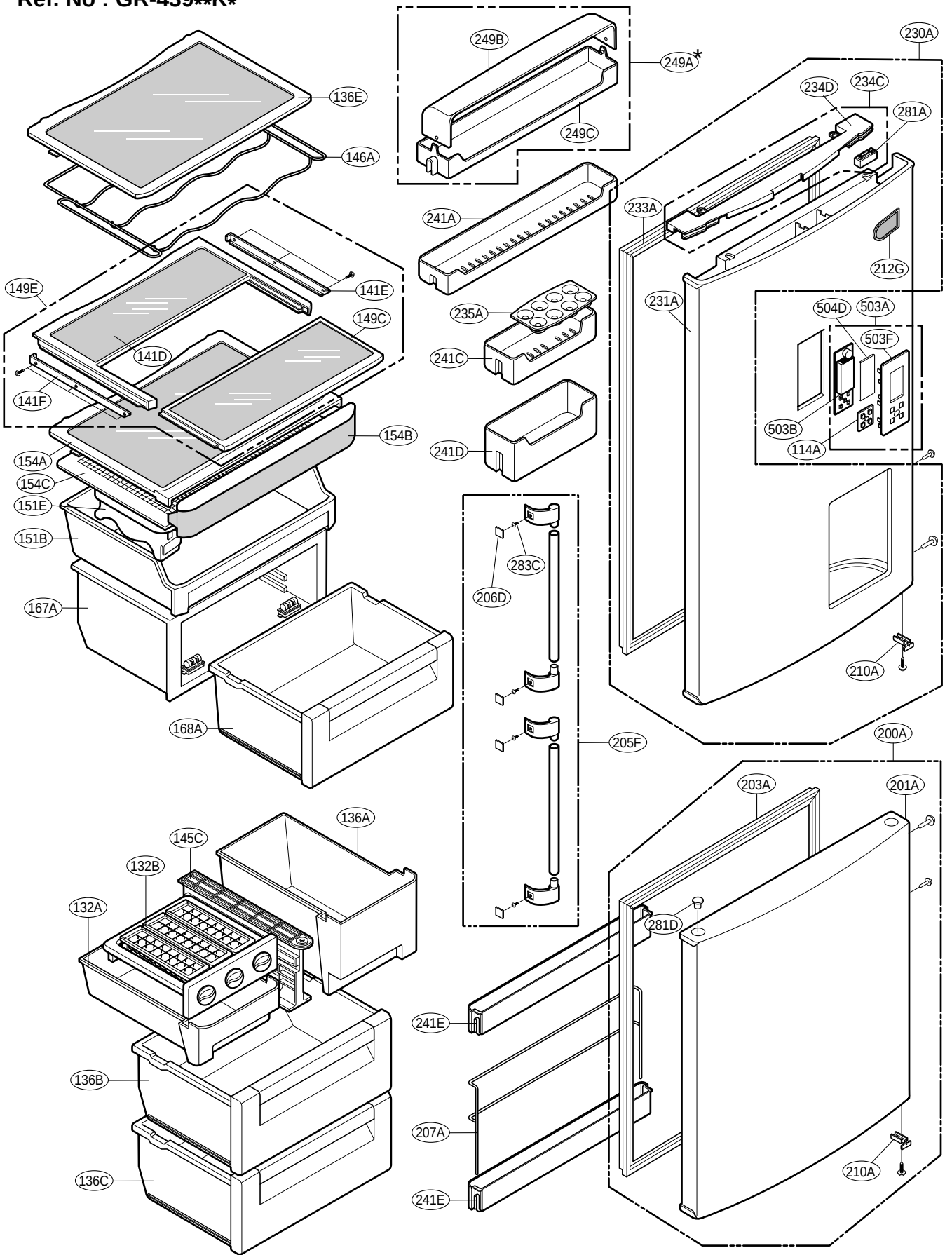

# Ref. No : GR-439**J*

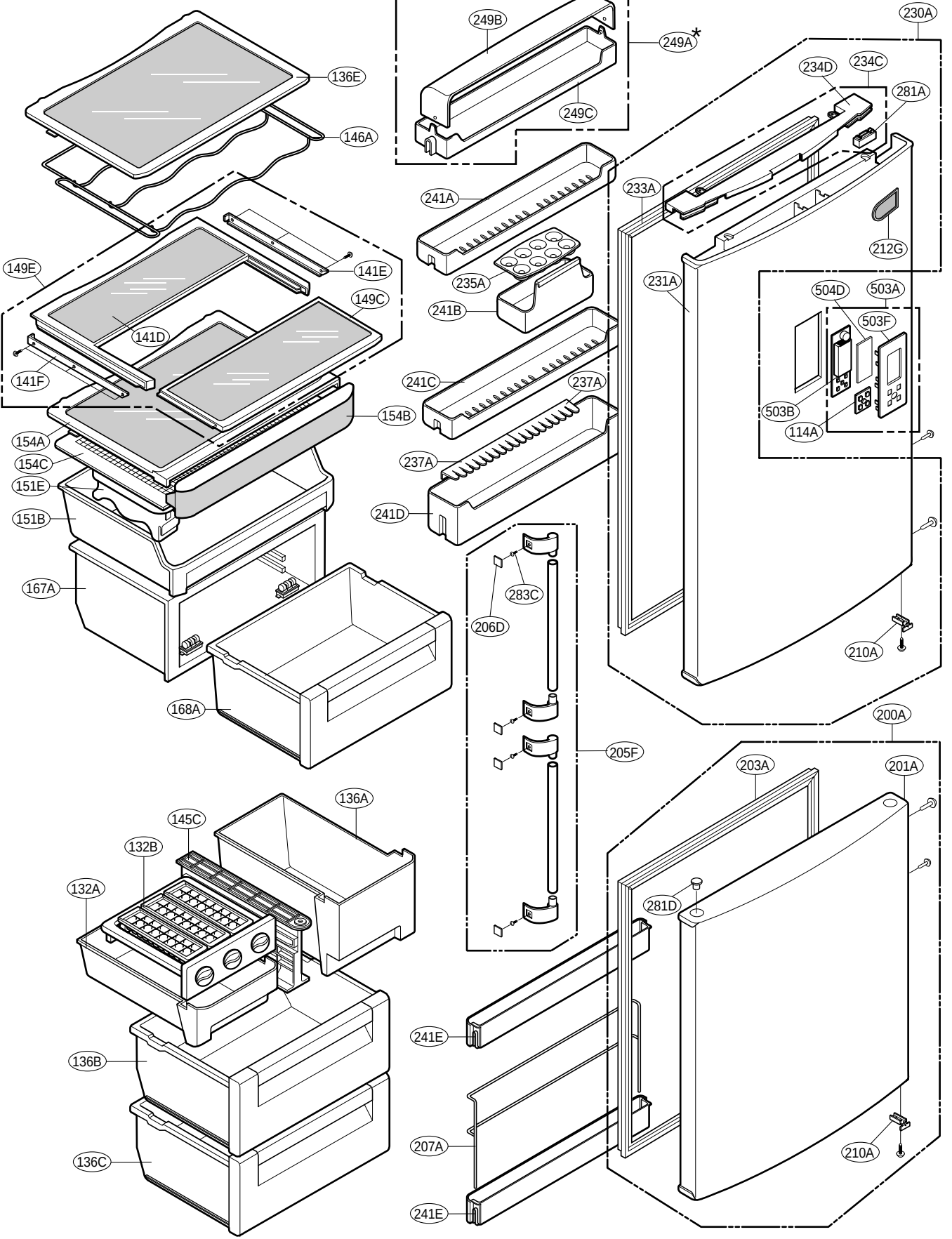

# Ref. No : GR-439**R*

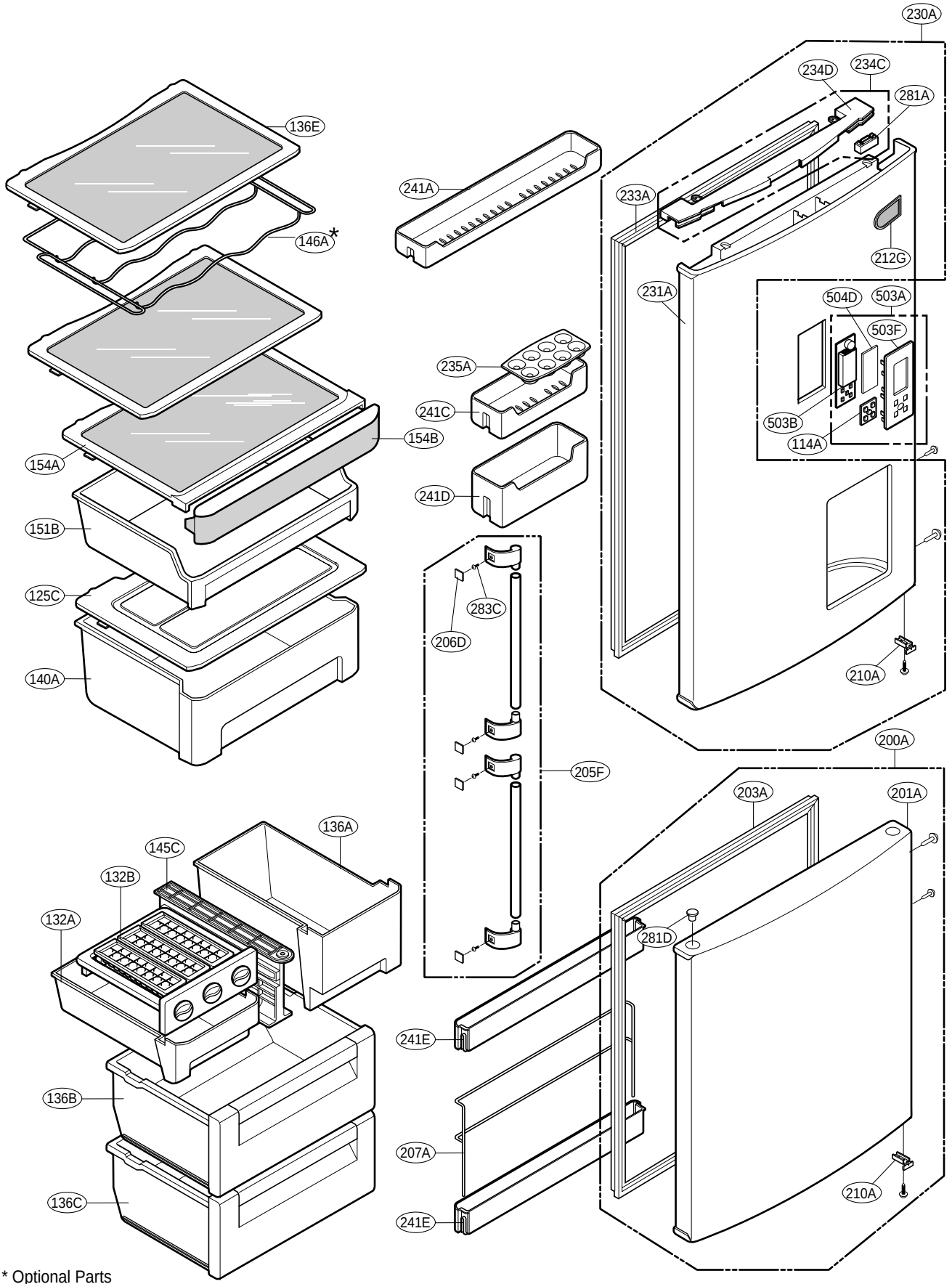


* Optional Parts

# Ref. No : GR-439**Q*

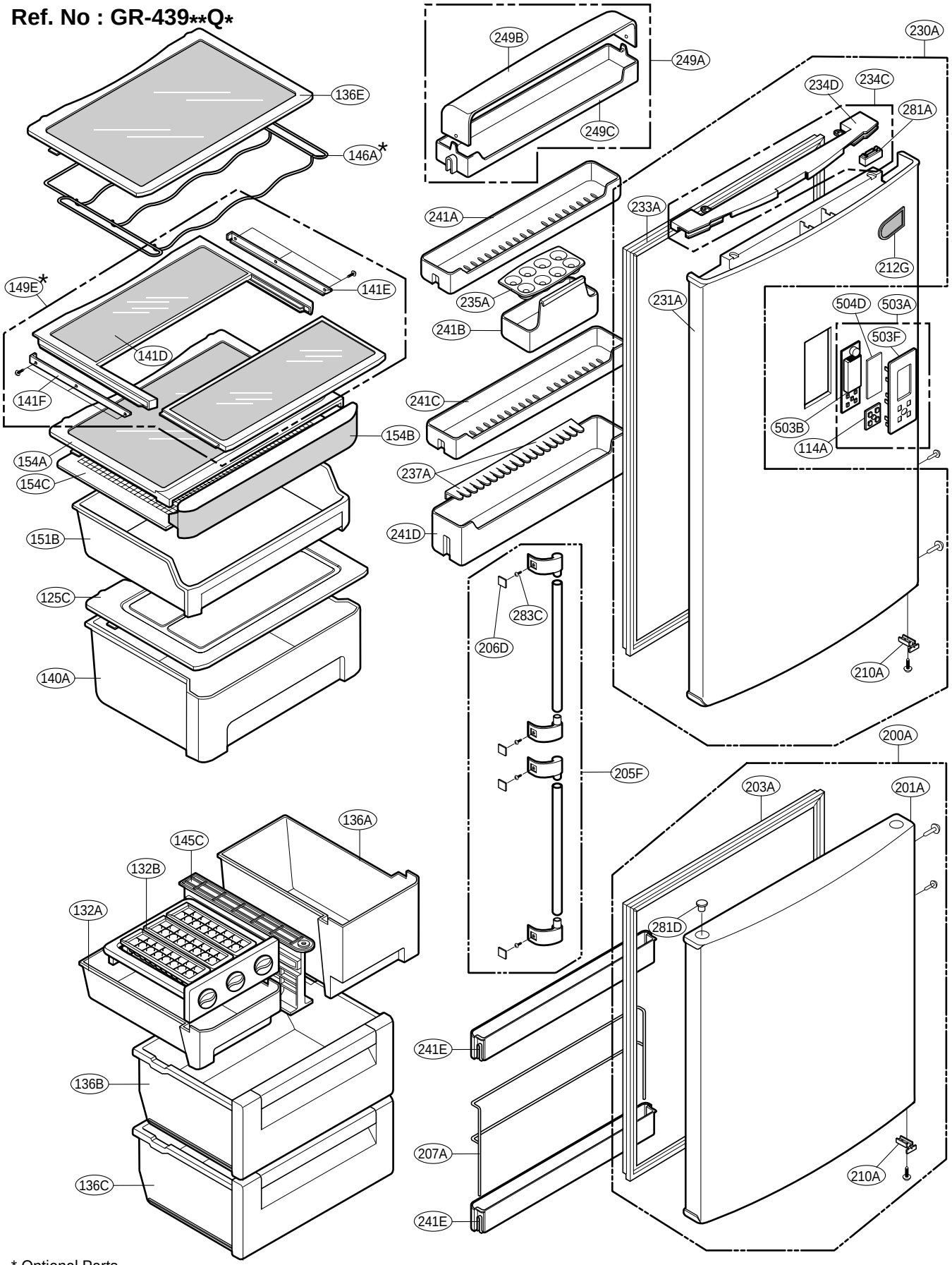


* Optional Parts

# Ref. No : GR-439**C*

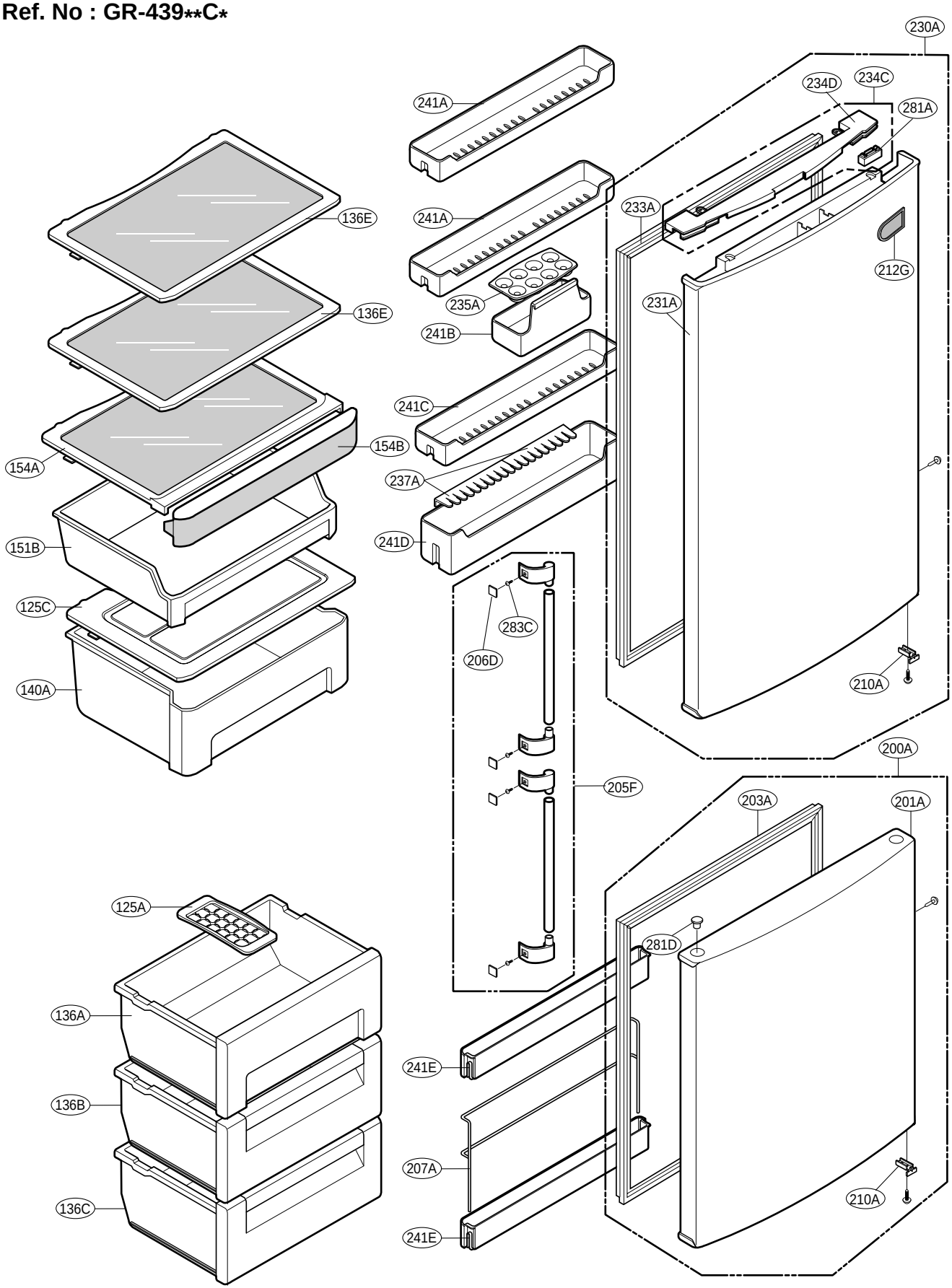
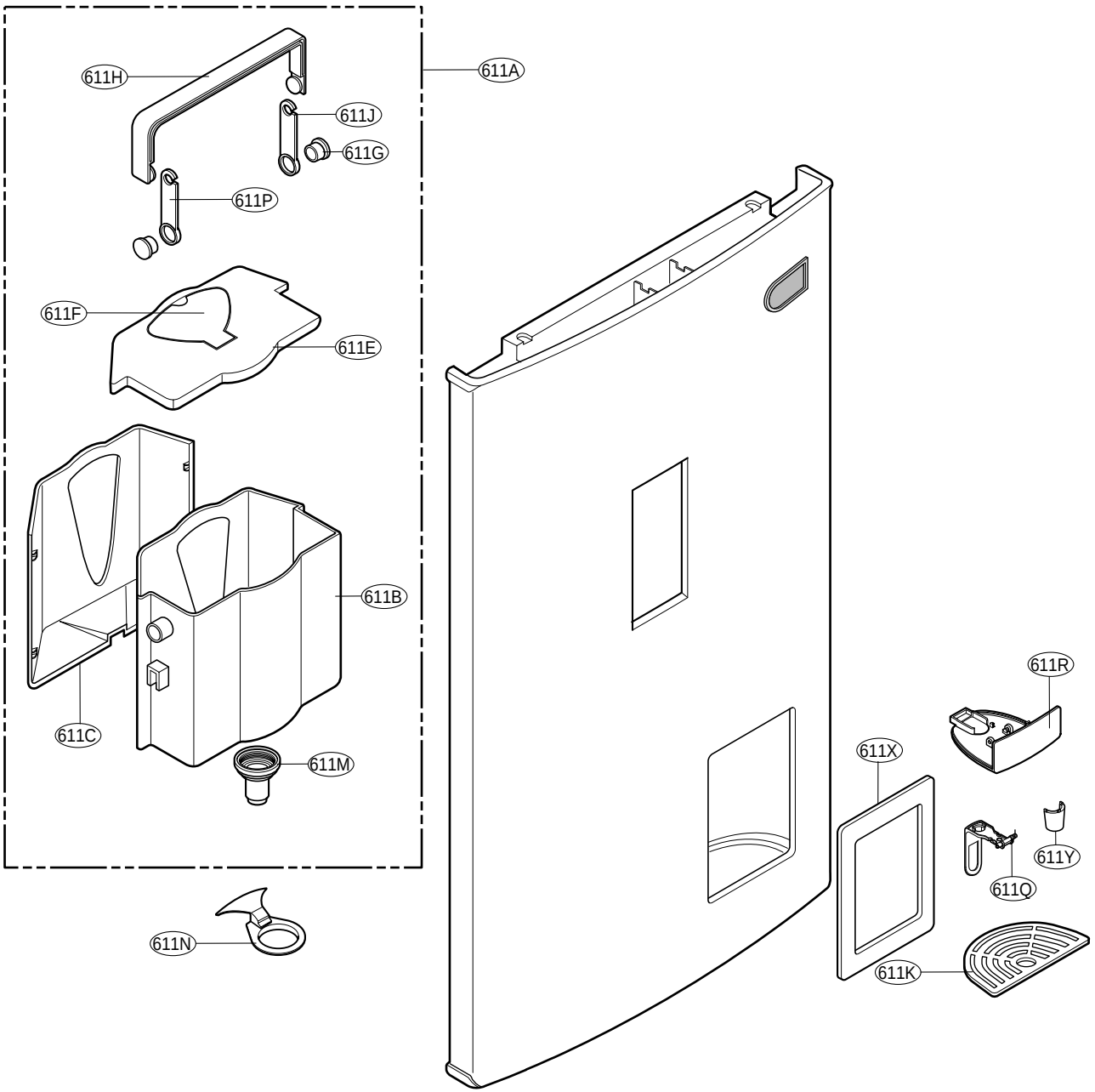
# Ref. No : GR-439**K(R)*