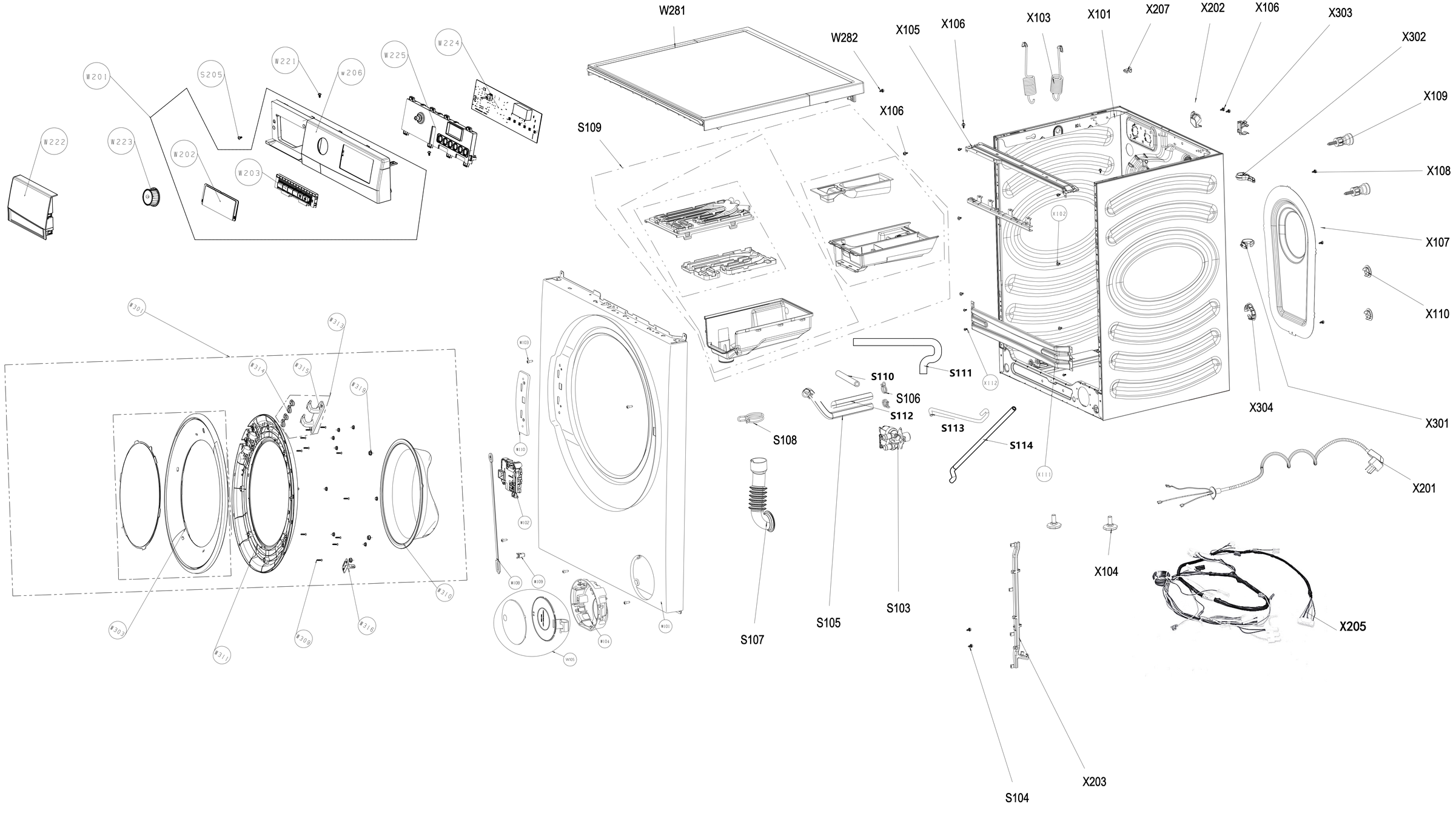
W281
W282
X105
X106
X103
X101
X207
X202
X106
X303
X302
X109
X108
X107
X110
X301
X304
X201
X205
X104
X203
S104
S103
S105
S107
S108
S109
S110
S106
S112
S113
S114
S111
W201
S205
W221
W206
W225
W224
W222
W223
W202
W203
#301
#313
#314
#315
#319
#303
#311
#308
#316
#310
#103
#110
#102
#108
#109
#104
#101
W105
X102
X112
X111

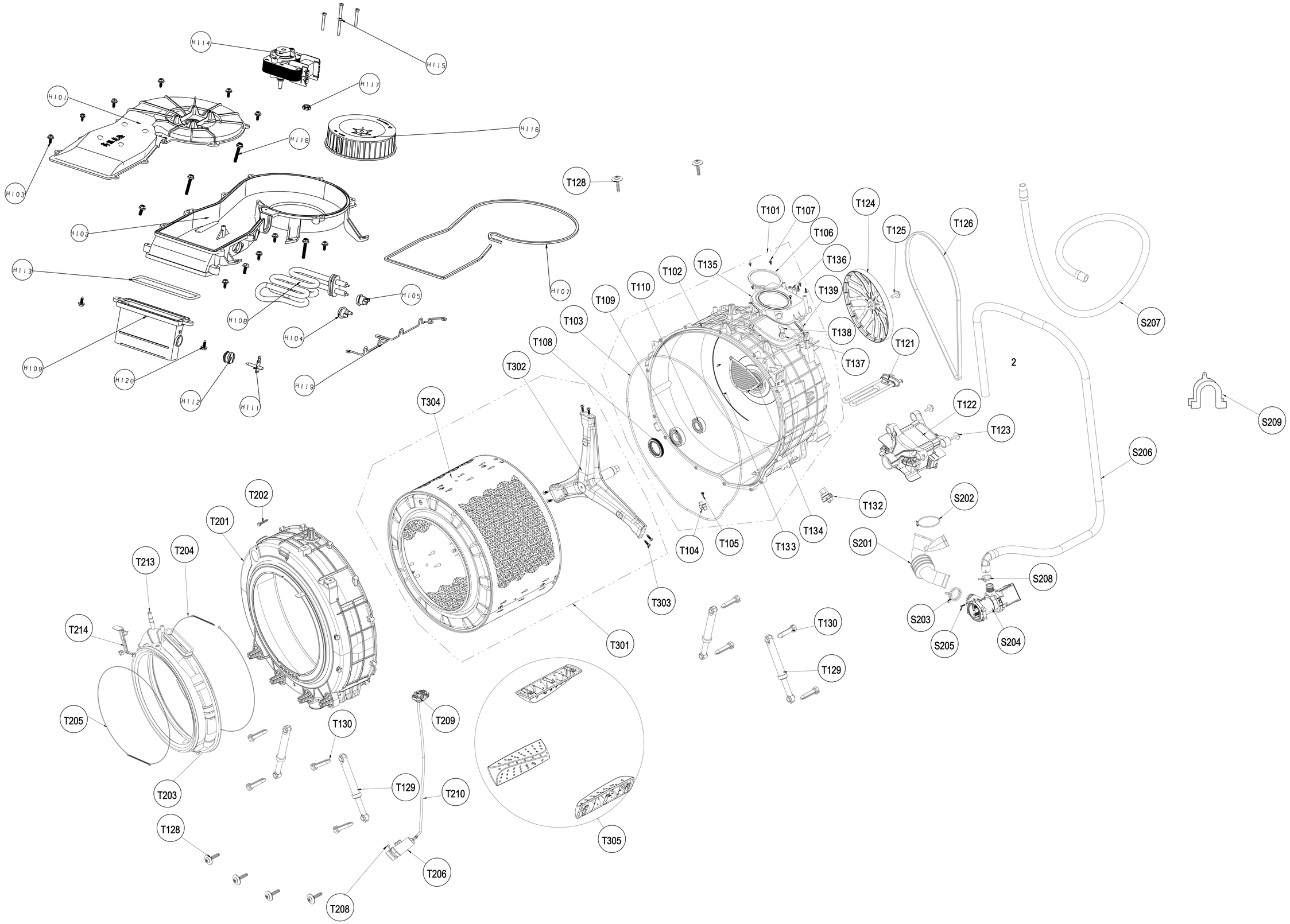
H114
H115
H117
H101
H116
H118
H103
H102
H113
H105
H108
H104
H109
H120
H112
H111
H119
H107
T128
T101
T107
T124
T106
T125
T126
T136
T135
T102
T110
T139
T109
T103
T138
T108
T121
T137
T302
2
S207
T304
T122
T123
S209
S206
T132
S202
T134
T104
T105
T133
S201
T202
T201
T204
T213
T303
S208
T130
S203
T214
T301
S205
S204
T129
T205
T209
T130
T203
T129
T210
T128
T305
T206
T208