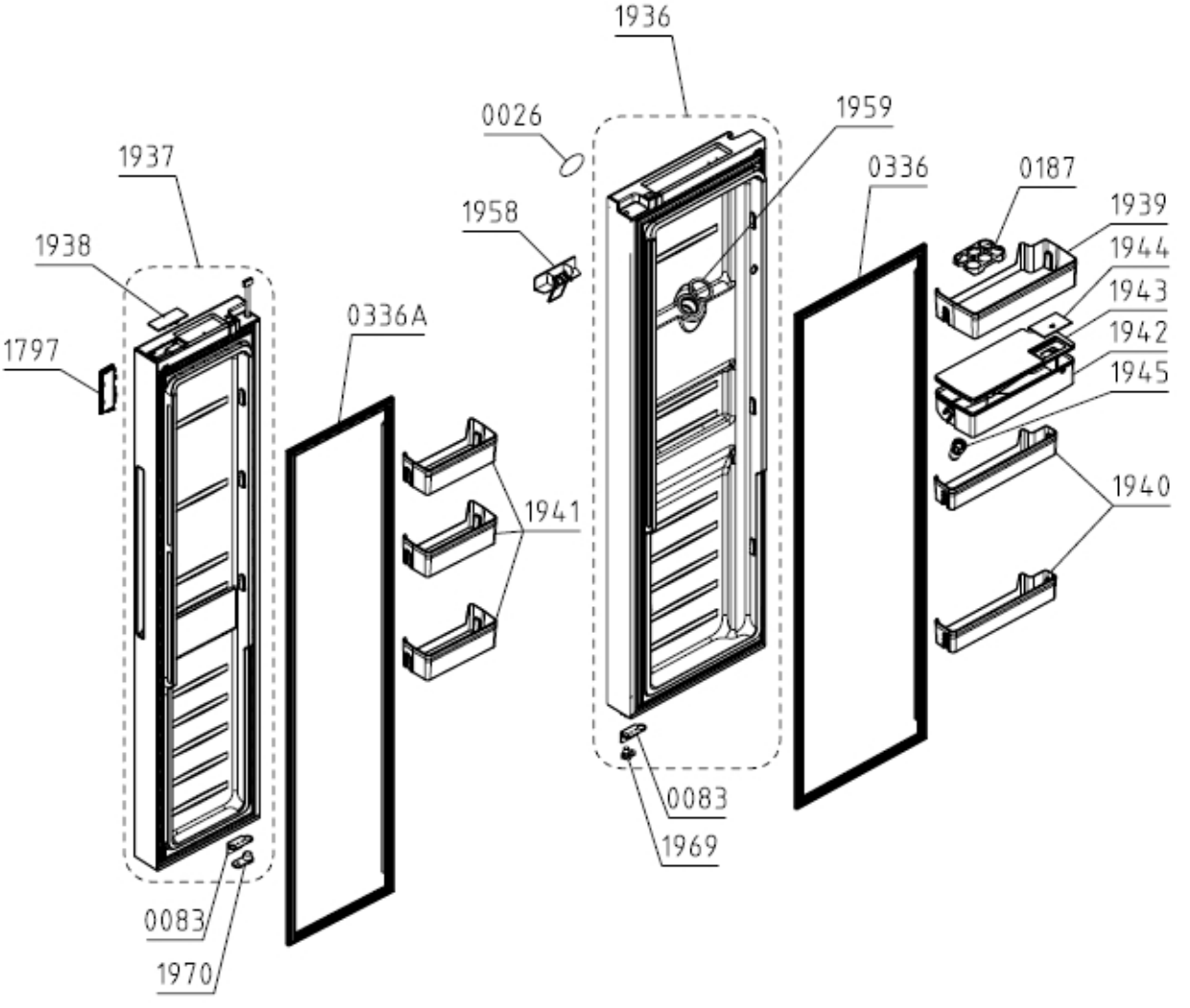
1936
0026
1959
1937
0336
0187
1958
1939
1938
1944
1943
0336A
1942
1797
1945
1941
1940
0083
1969
0083
1970

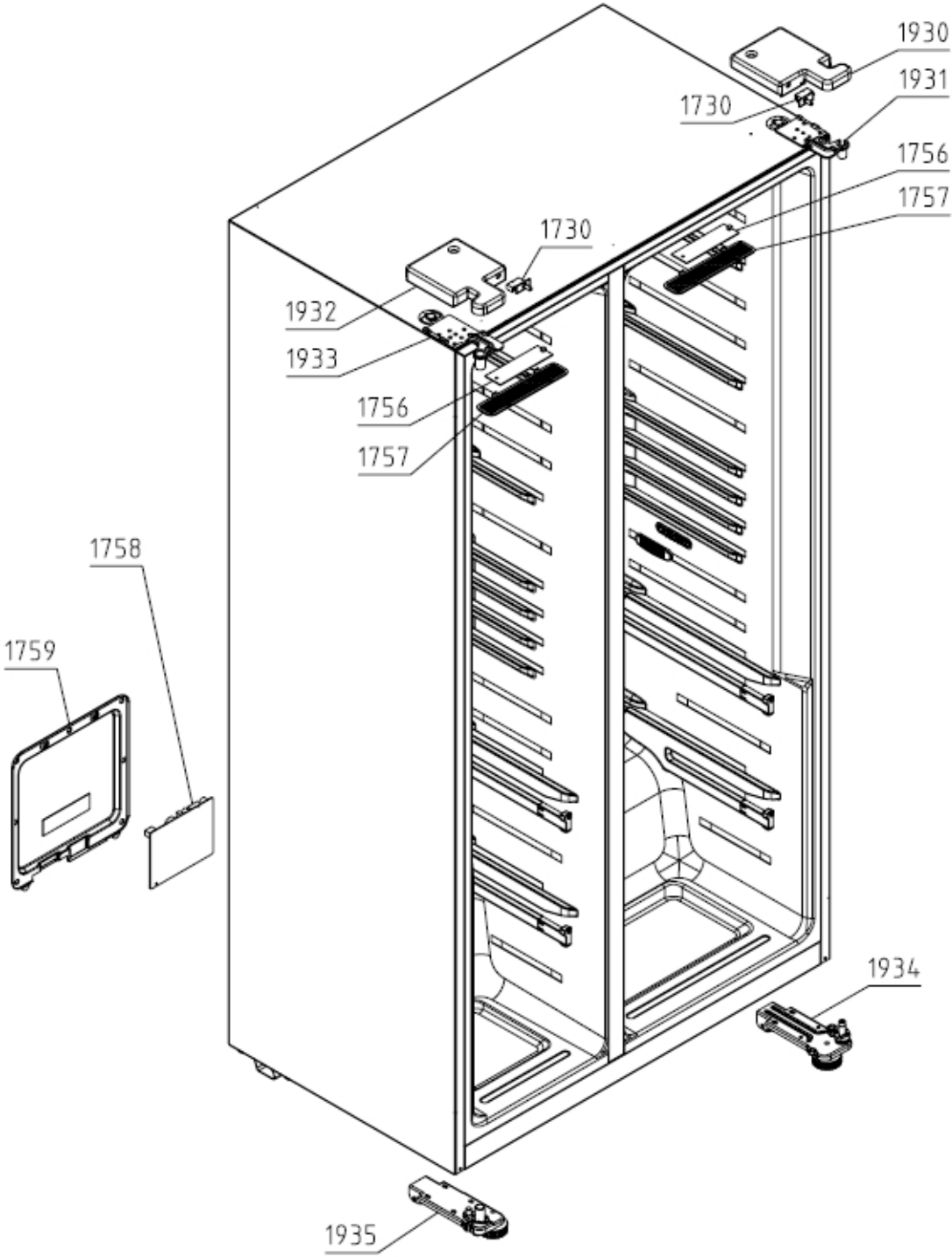
1930
1931
1730
1756
1757
1730
1932
1933
1756
1757
1758
1759
1934
1935

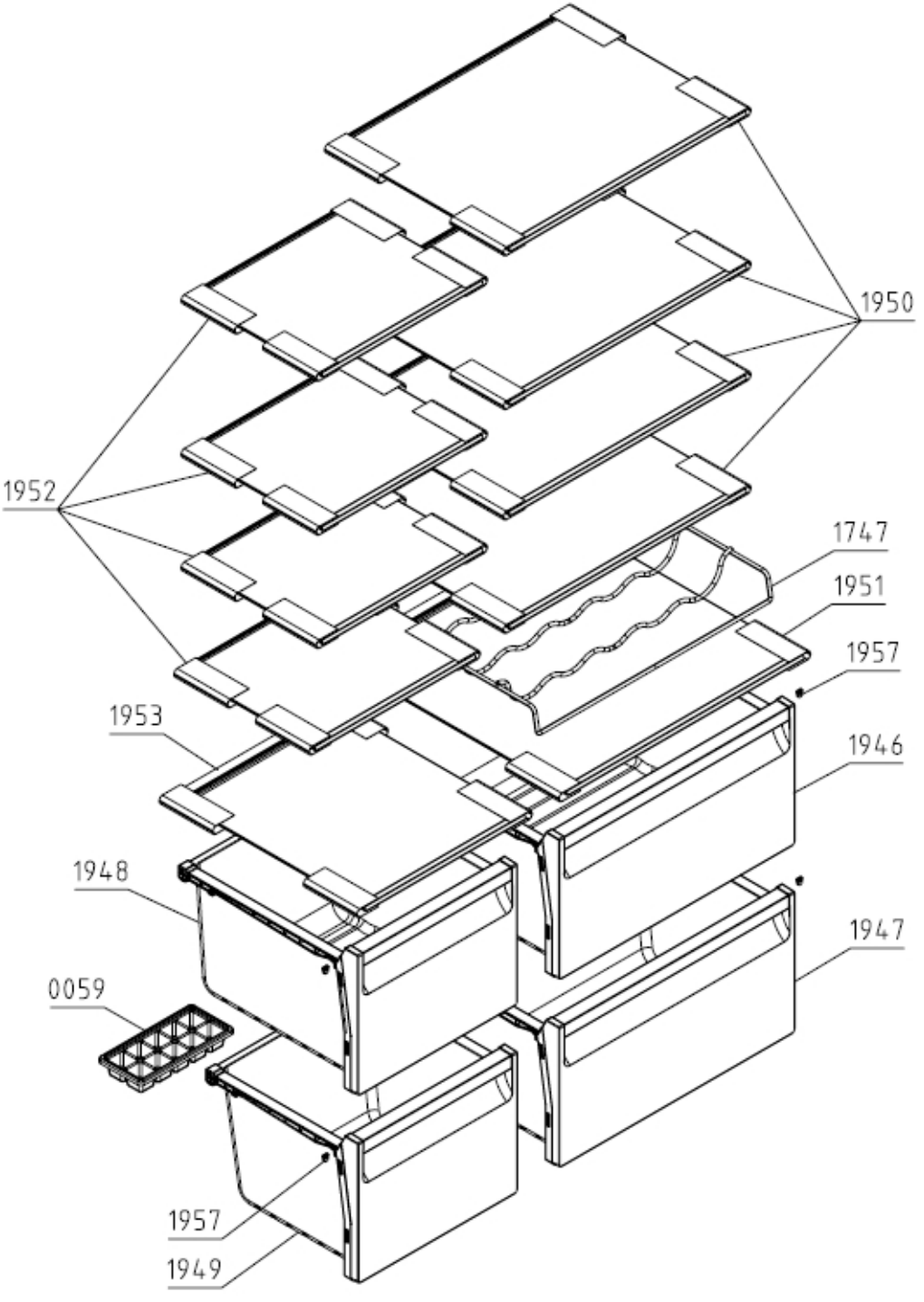
1950
1952
1747
1951
1957
1953
1946
1948
1947
0059
1957
1949

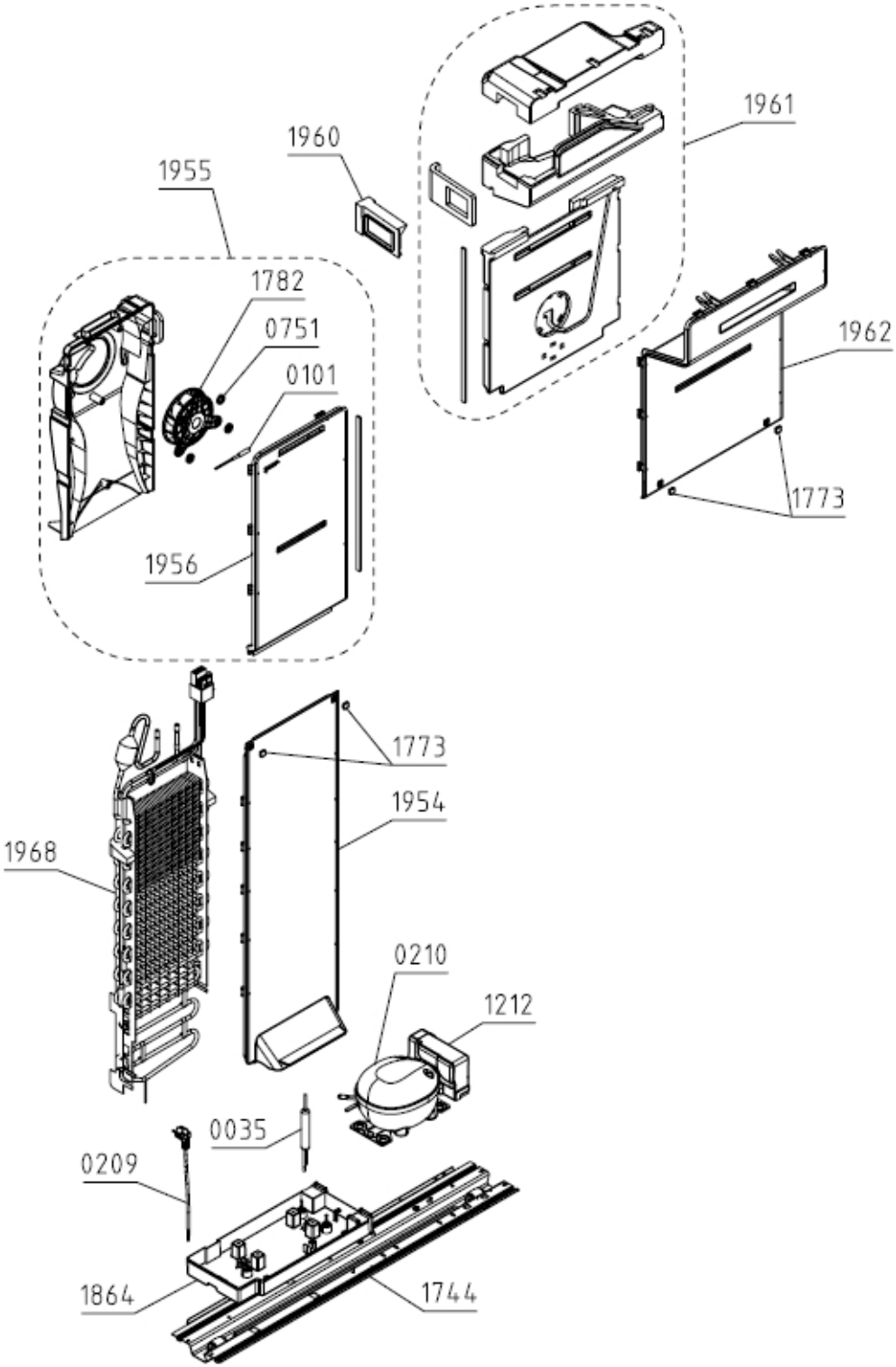
1961
1960
1955
1782
0751
0101
1962
1773
1956
1773
1954
1968
0210
1212
0035
0209
1864
1744