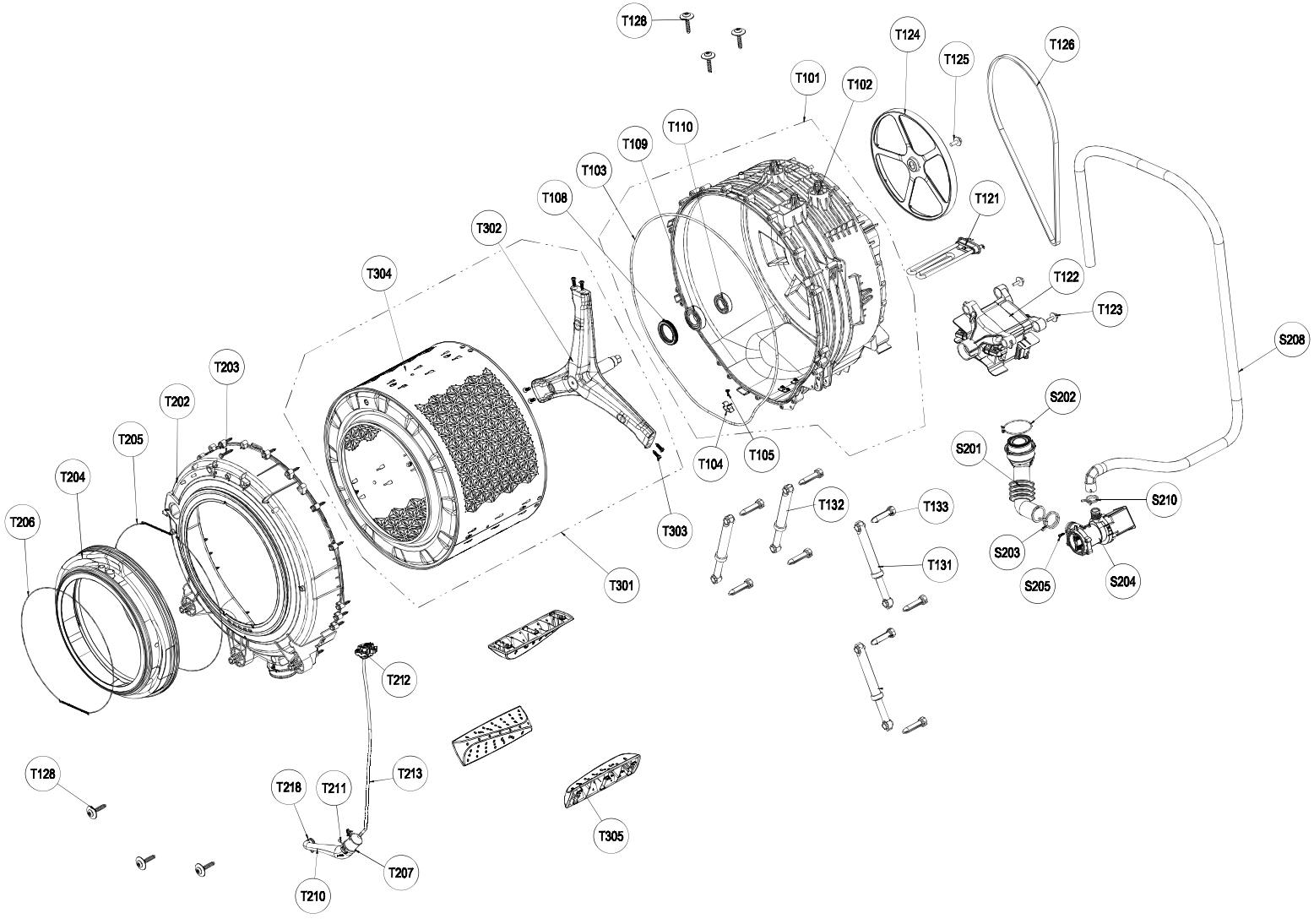
T128
T124
T125
T126
T101
T102
T110
T109
T103
T108
T121
T302
T304
T122
T123
S208
T203
T202
S202
T205
S201
T204
T104
T105
S210
T206
T132
T133
T303
S203
T131
T301
S205
S204
T212
T213
T128
T218
T211
T305
T207
T210

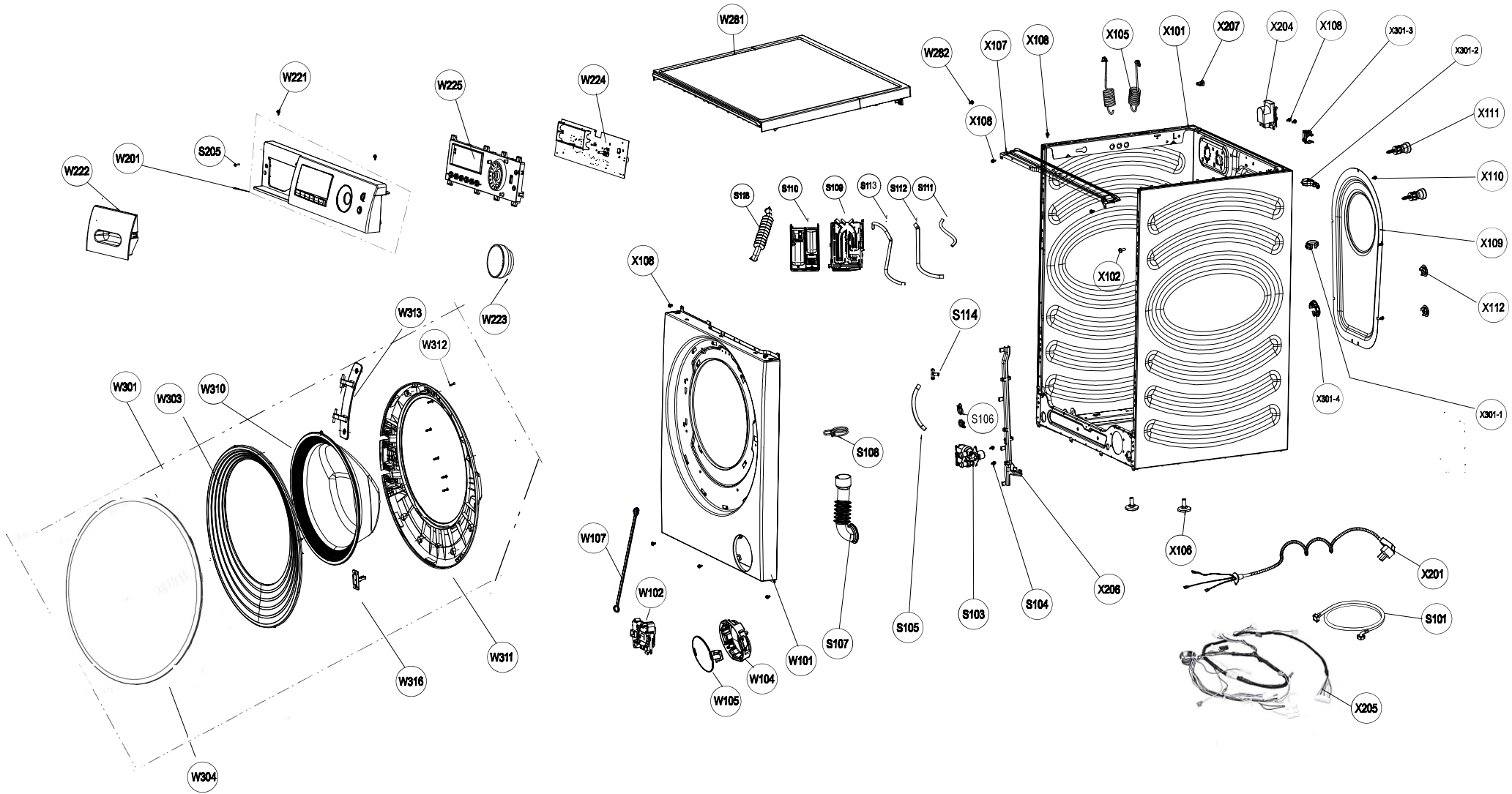
W281
W282
X107
X108
X105
X101
X207
X204
X108
X301-3
X301-2
X111
X110
X109
X112
X301-4
X301-1
X108
X102
W221
W225
W224
W222
W201
S205
S118
S110
S109
S113
S112
S111
X108
W223
W313
W312
W301
W303
W310
S114
S106
S108
W107
W102
W101
S107
S105
S103
S104
X206
X106
X201
S101
W316
W311
W104
W105
W304
X205