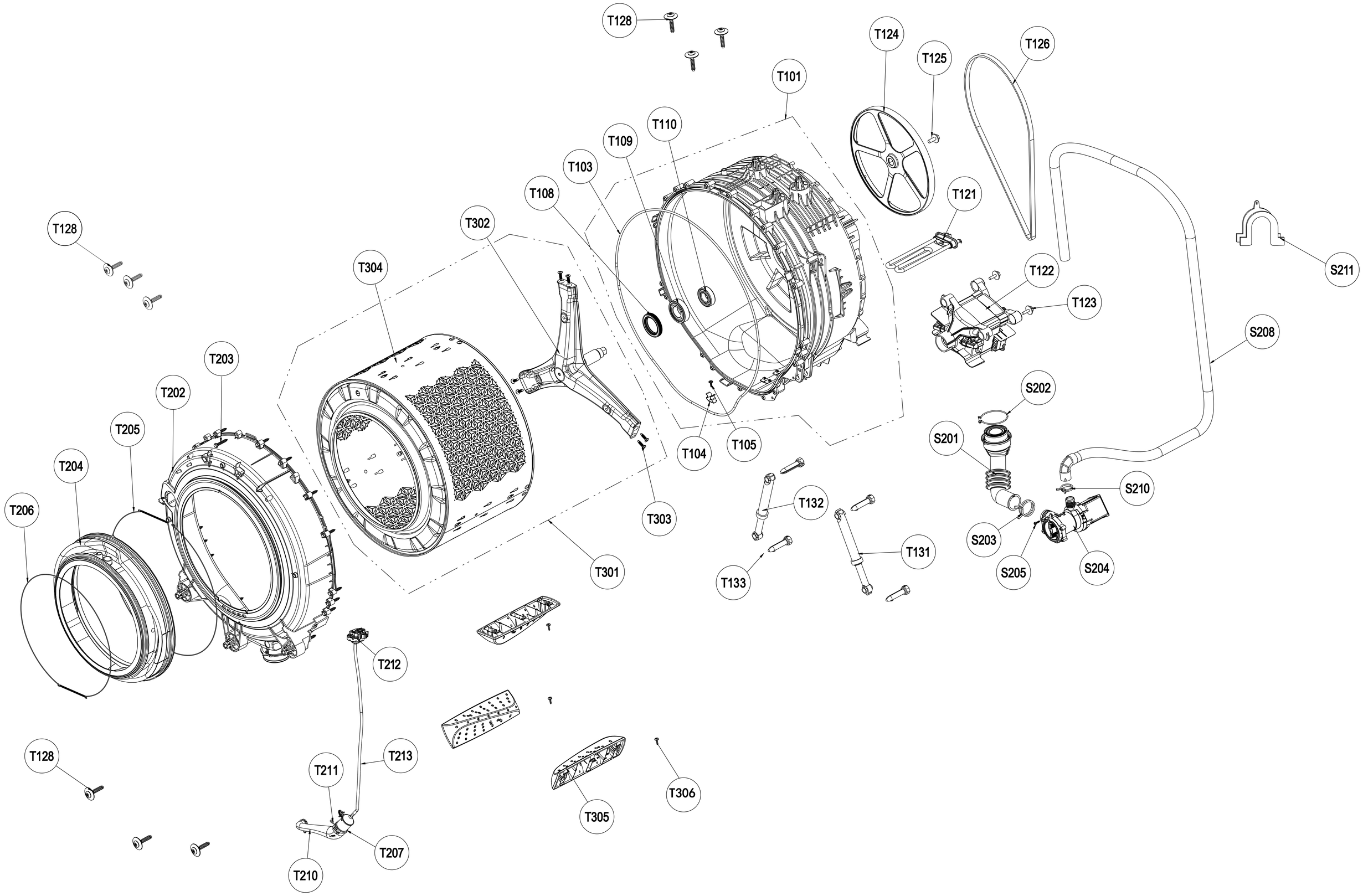
T128
T124
T125
T126
T101
T110
T109
T103
T108
T121
T302
T304
T122
T123
S211
S208
T203
T202
T205
T204
T206
S202
S201
T104
T105
T303
T132
S210
S203
S205
S204
T131
T133
T301
T212
T213
T211
T207
T210
T305
T306

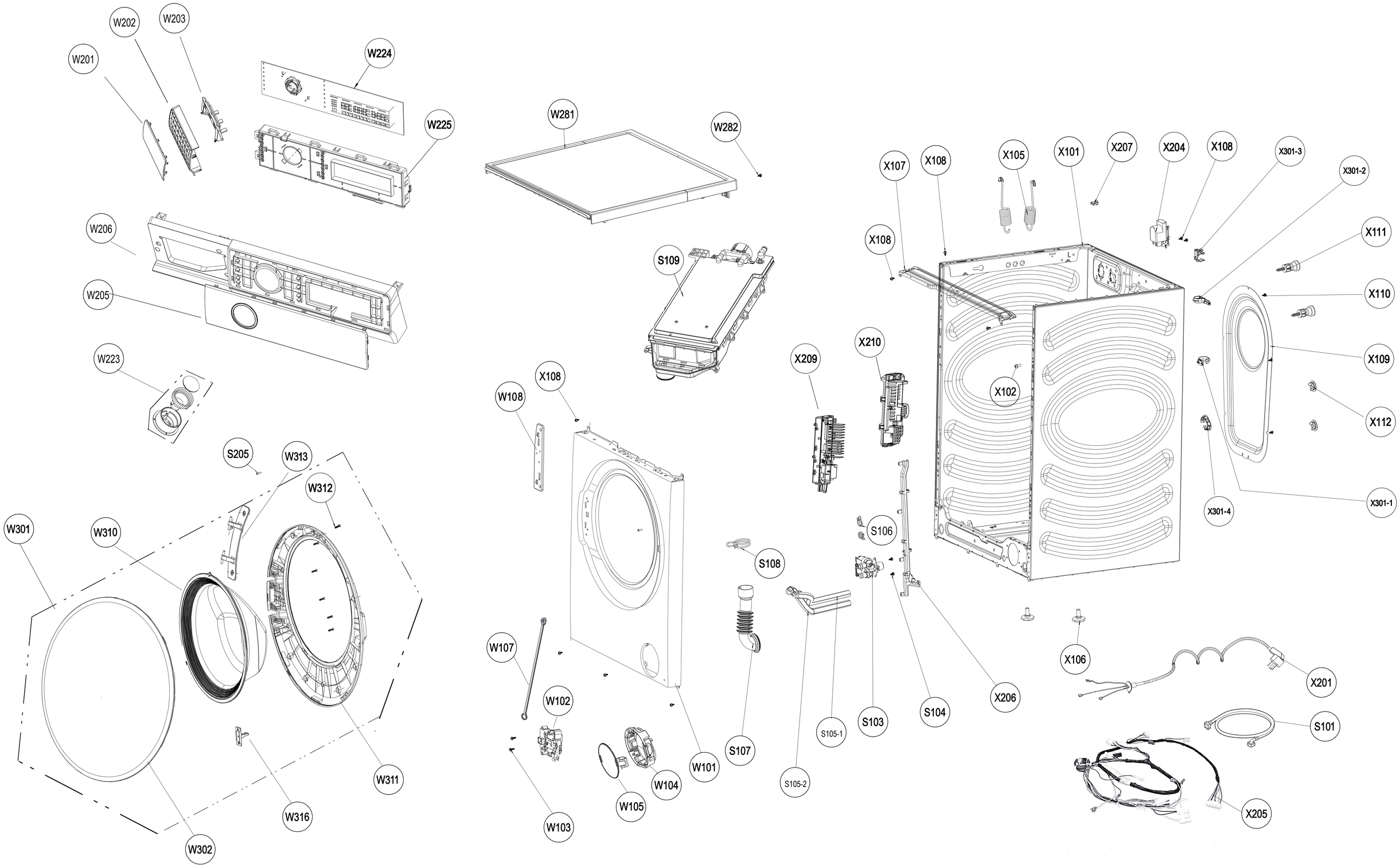
W202
W203
W201
W224
W225
W281
W282
W206
W205
S109
W223
X108
W108
X209
X210
X107
X108
X105
X101
X207
X204
X108
X301-3
X301-2
X111
X110
X109
X112
X102
X301-4
X301-1
S205
W313
W312
W301
W310
S106
S108
W107
W102
W103
W105
W104
W101
S107
S105-2
S105-1
S103
S104
X206
X106
X201
S101
X205
W311
W316
W302