VUE A

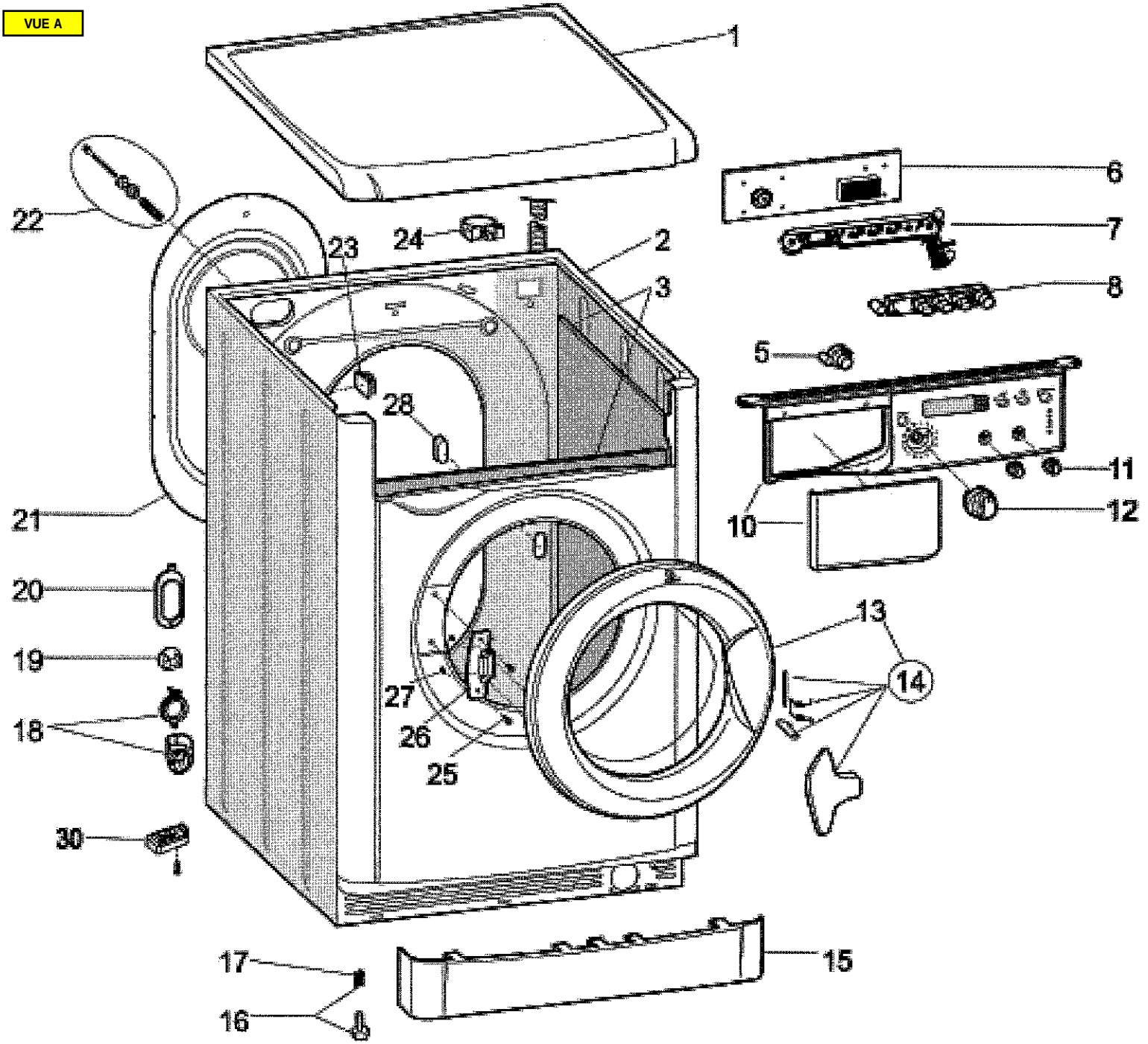

VUE B

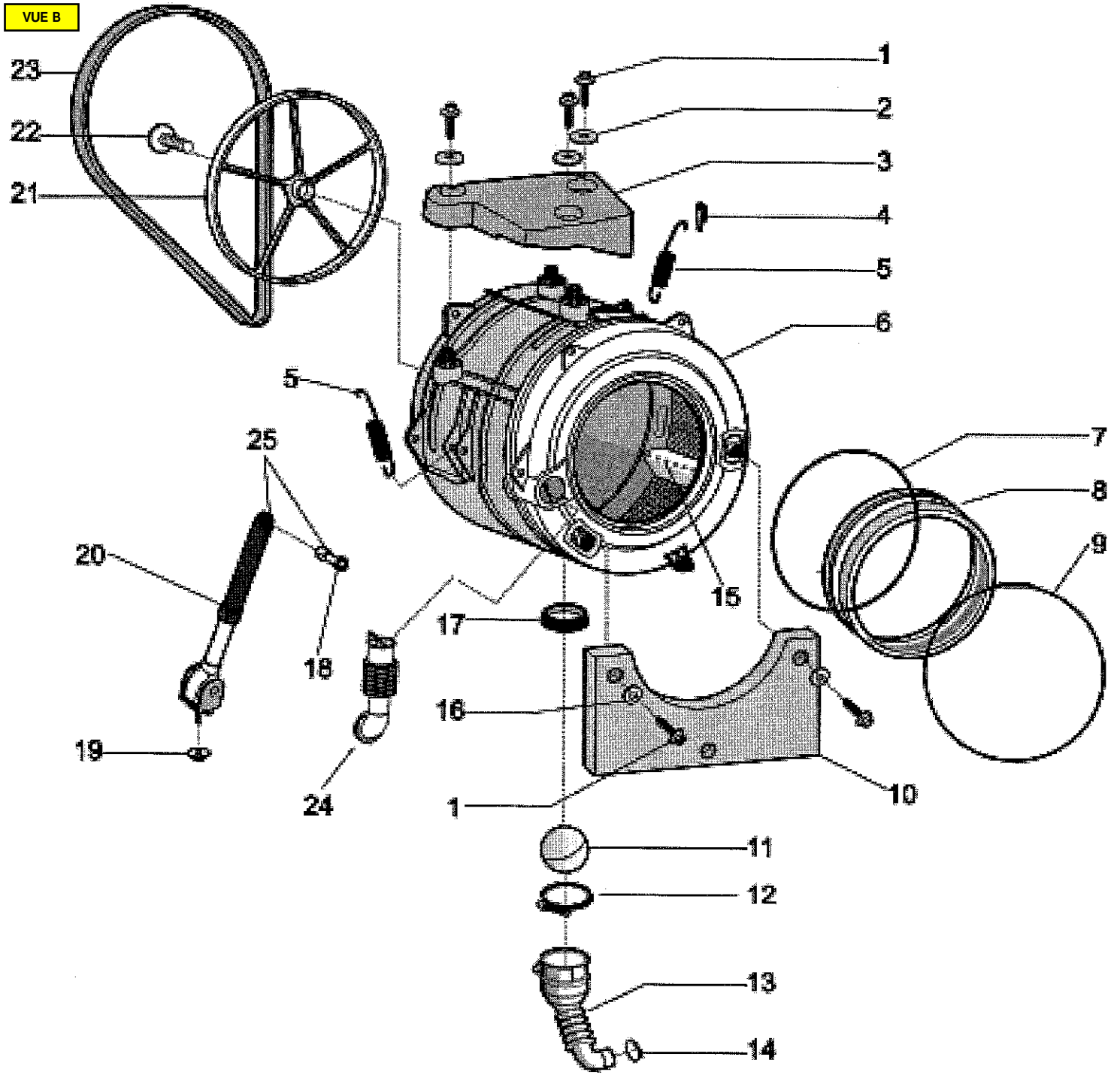

VUE C

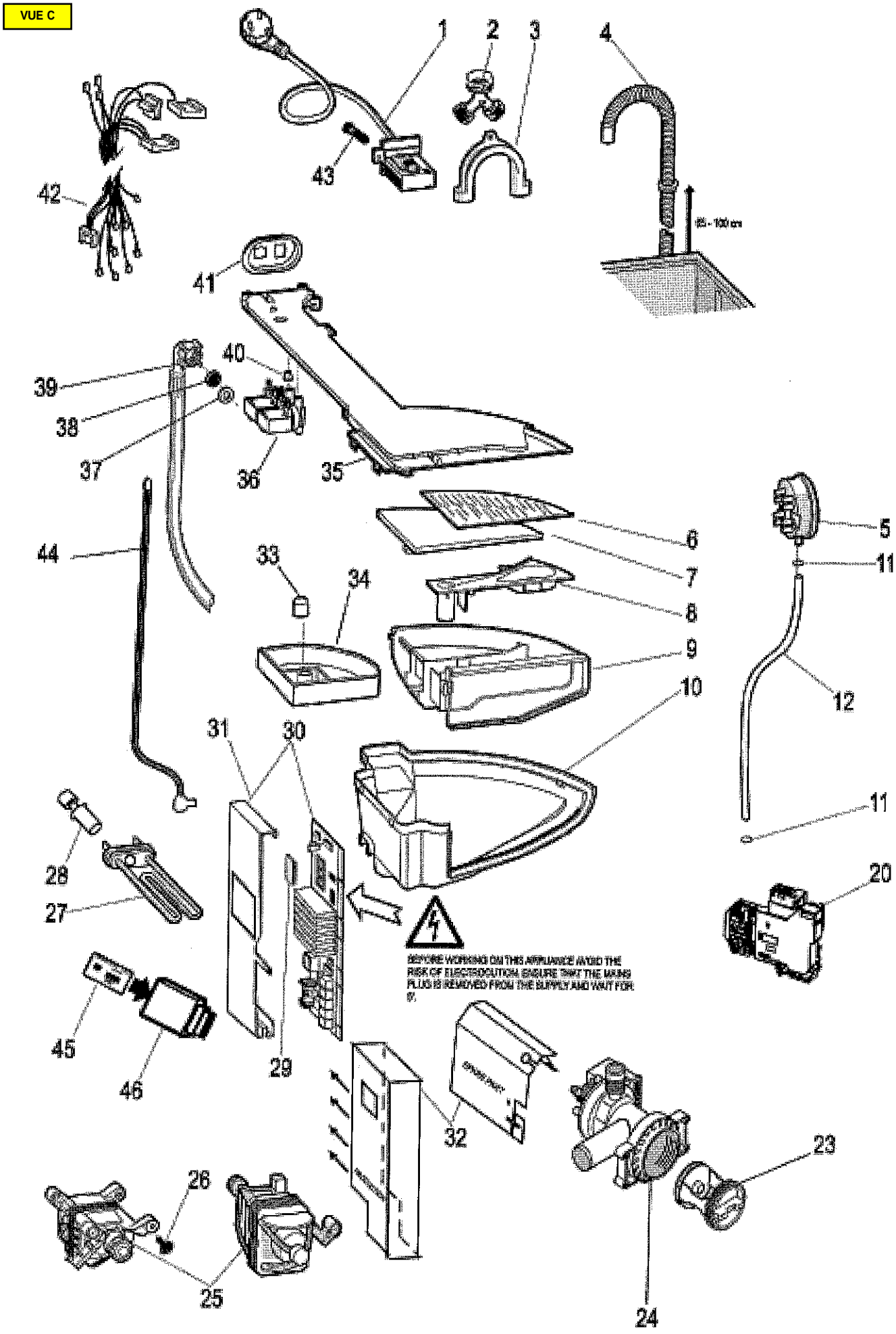
1
2
3
4
43
42
41
40
39
38
37
36
35
44
33
34
6
7
8
9
10
5
11
12
11
31
30
28
27
20
45
46
29
32
23
26
25
24
BEFORE WORKING ON THIS APPLIANCE AVOID THE RISK OF ELECTROCUTION, ENSURE THAT THE MAINS PLUG IS REMOVED FROM THE SUPPLY AND WAIT FOR IT.