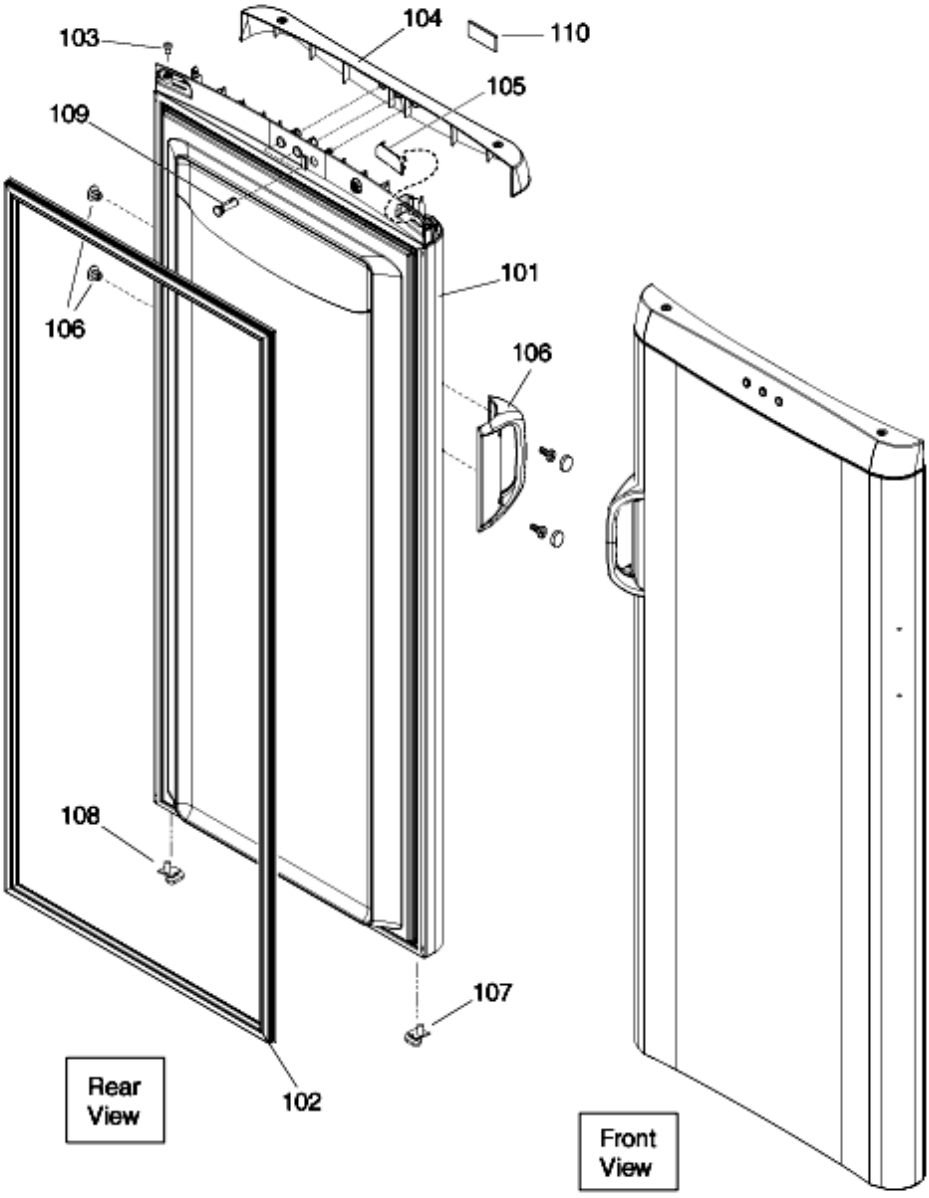
103
104
110
105
109
101
106
106
108
107
102
Rear View
Front View

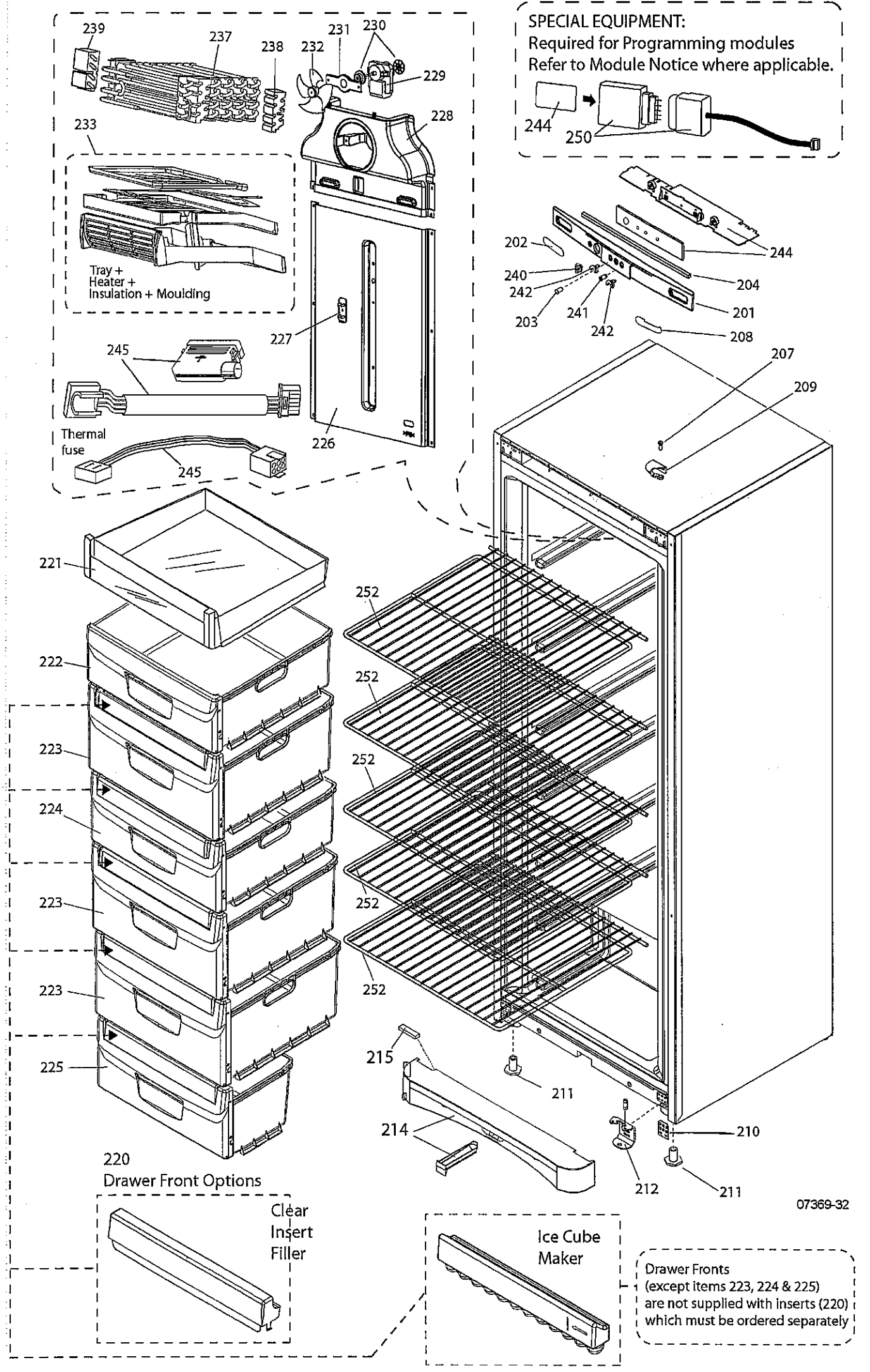
SPECIAL EQUIPMENT:
Required for Programming modules
Refer to Module Notice where applicable.
244
250
239
237
238
232
231
230
229
228
233
Tray +
Heater +
Insulation + Moulding
227
226
245
Thermal
fuse
245
202
240
242
203
241
242
244
204
201
208
207
209
221
222
223
224
223
223
225
252
252
252
252
215
214
211
210
212
211
220
Drawer Front Options
Clear
Insert
Filler
Ice Cube
Maker
Drawer Fronts
(except items 223, 224 & 225)
are not supplied with inserts (220)
which must be ordered separately
07369-32

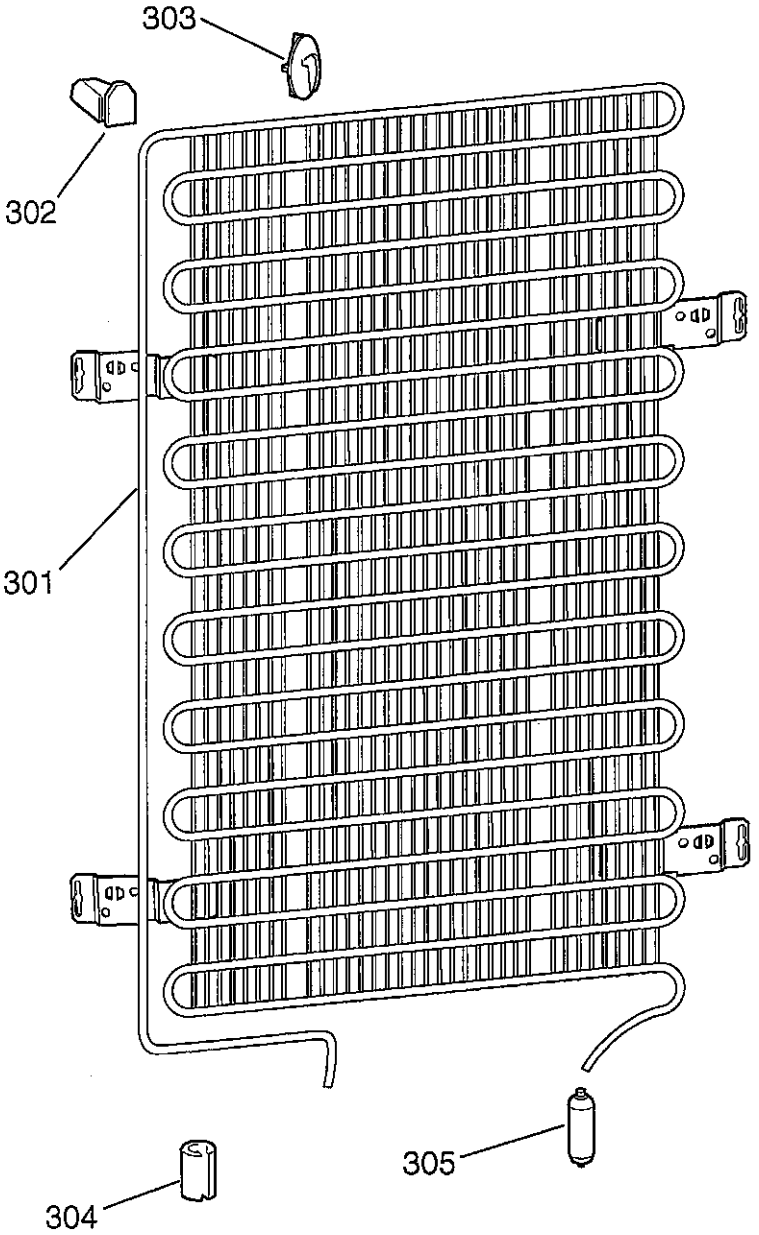
303
302
301
305
304

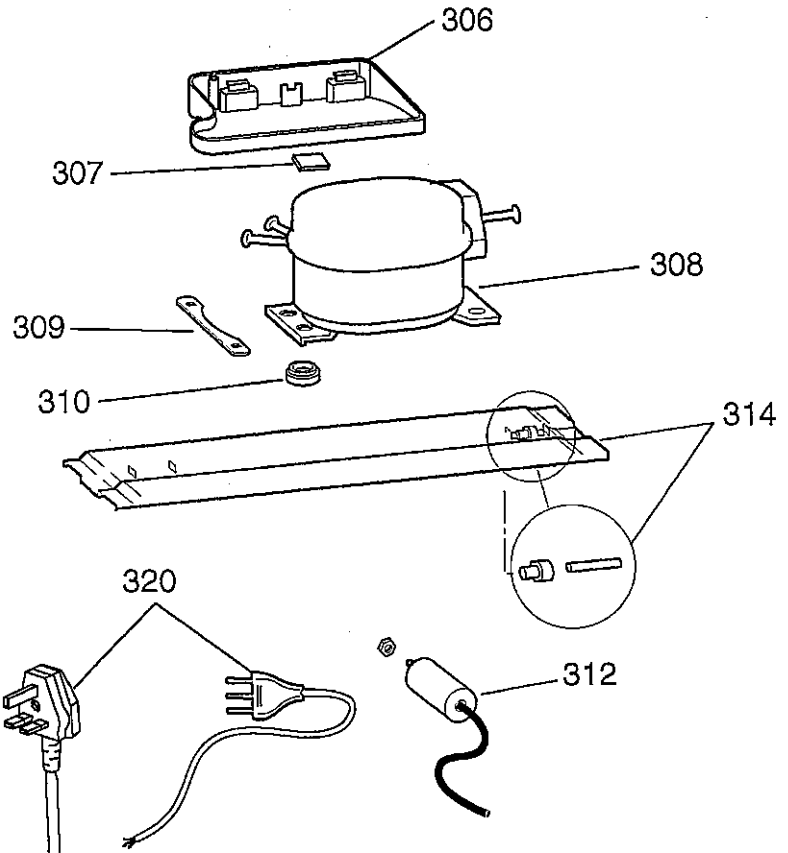
306
307
308
309
310
314
320
312