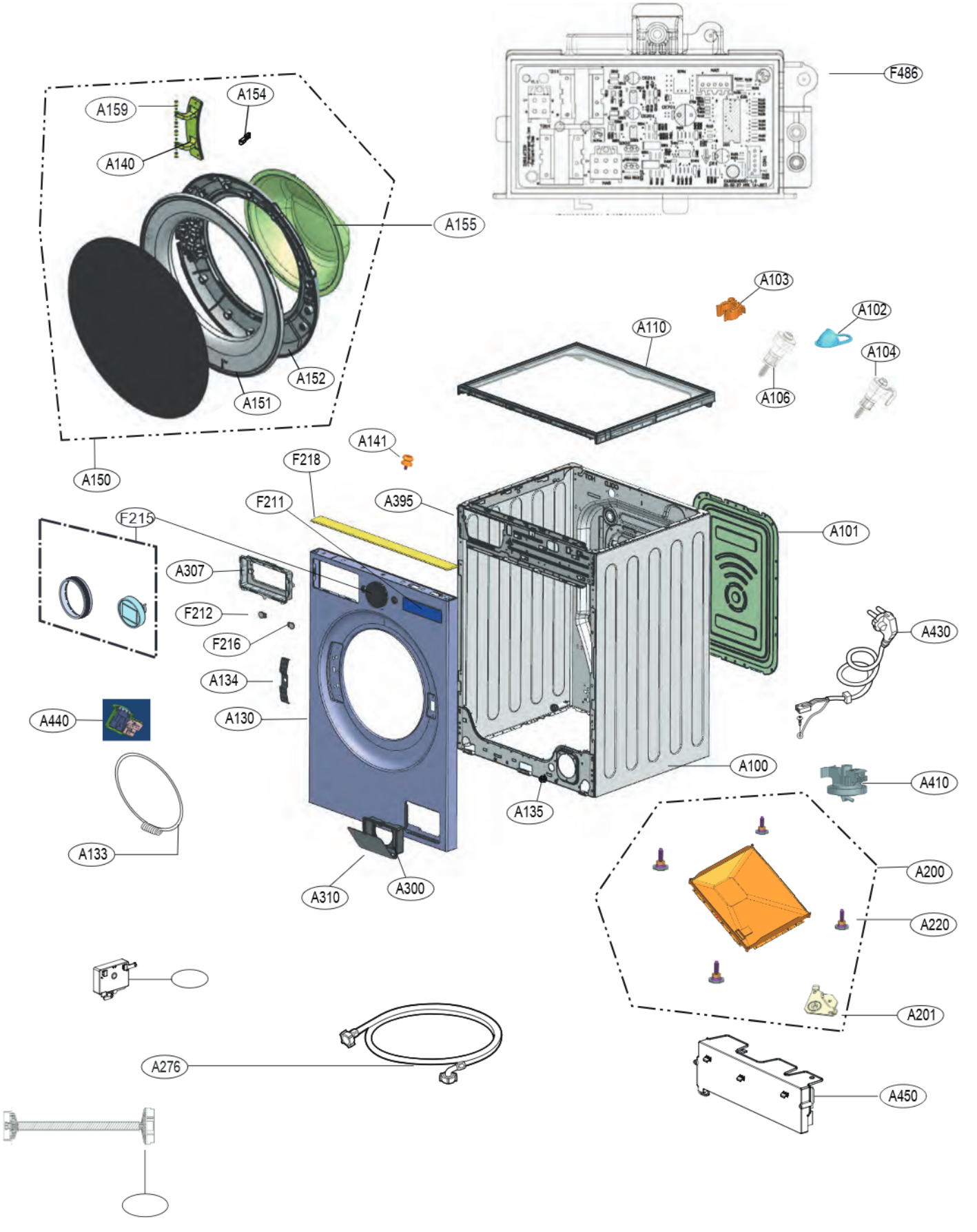
F486
A159
A154
A140
A155
A152
A151
A150
A103
A102
A110
A104
A106
A141
F218
A395
F211
F215
A101
A307
F212
F216
A430
A134
A440
A130
A100
A410
A135
A133
A310
A300
A200
A220
A201
A276
A450

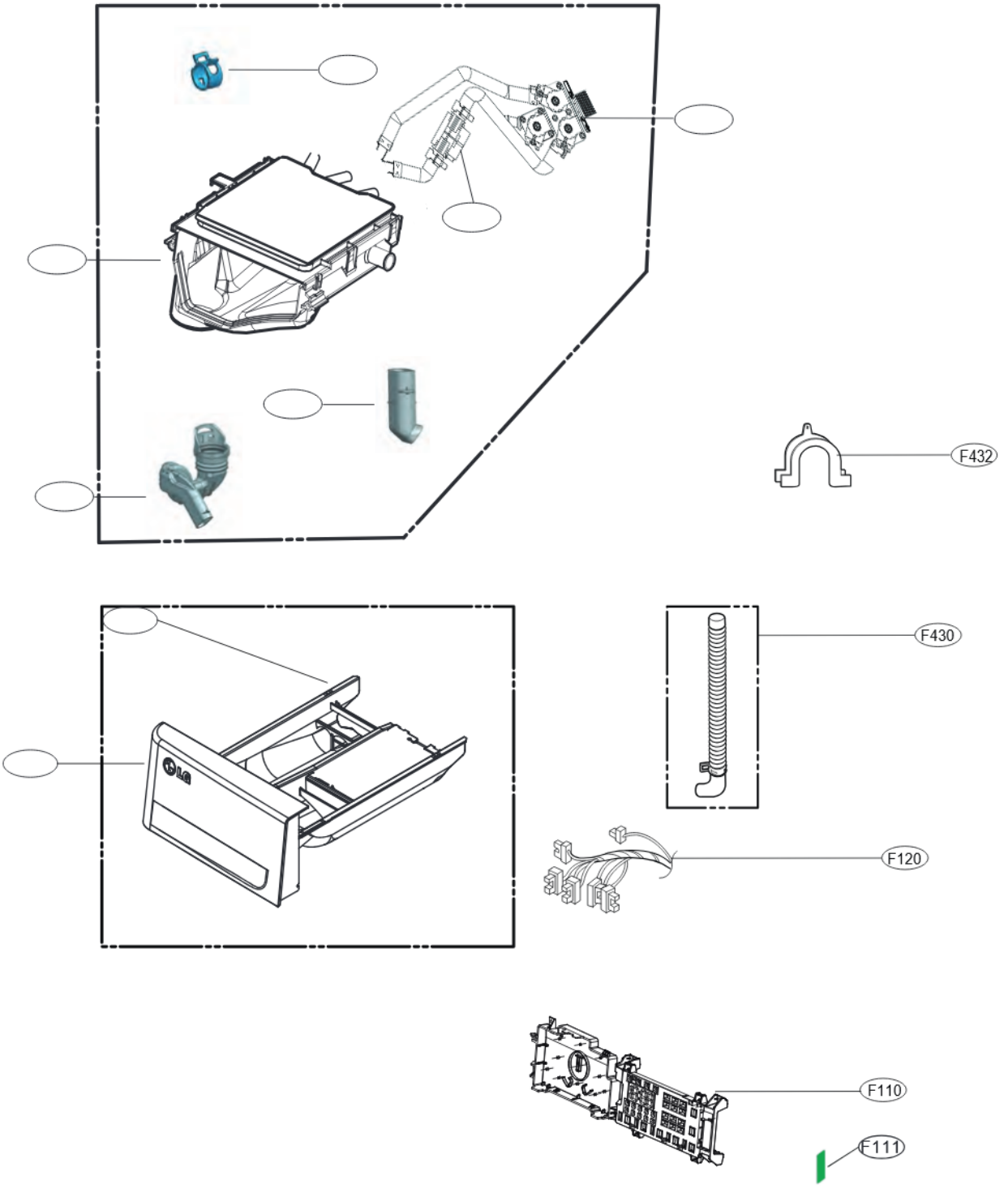
F432
F430
F120
F110
F111

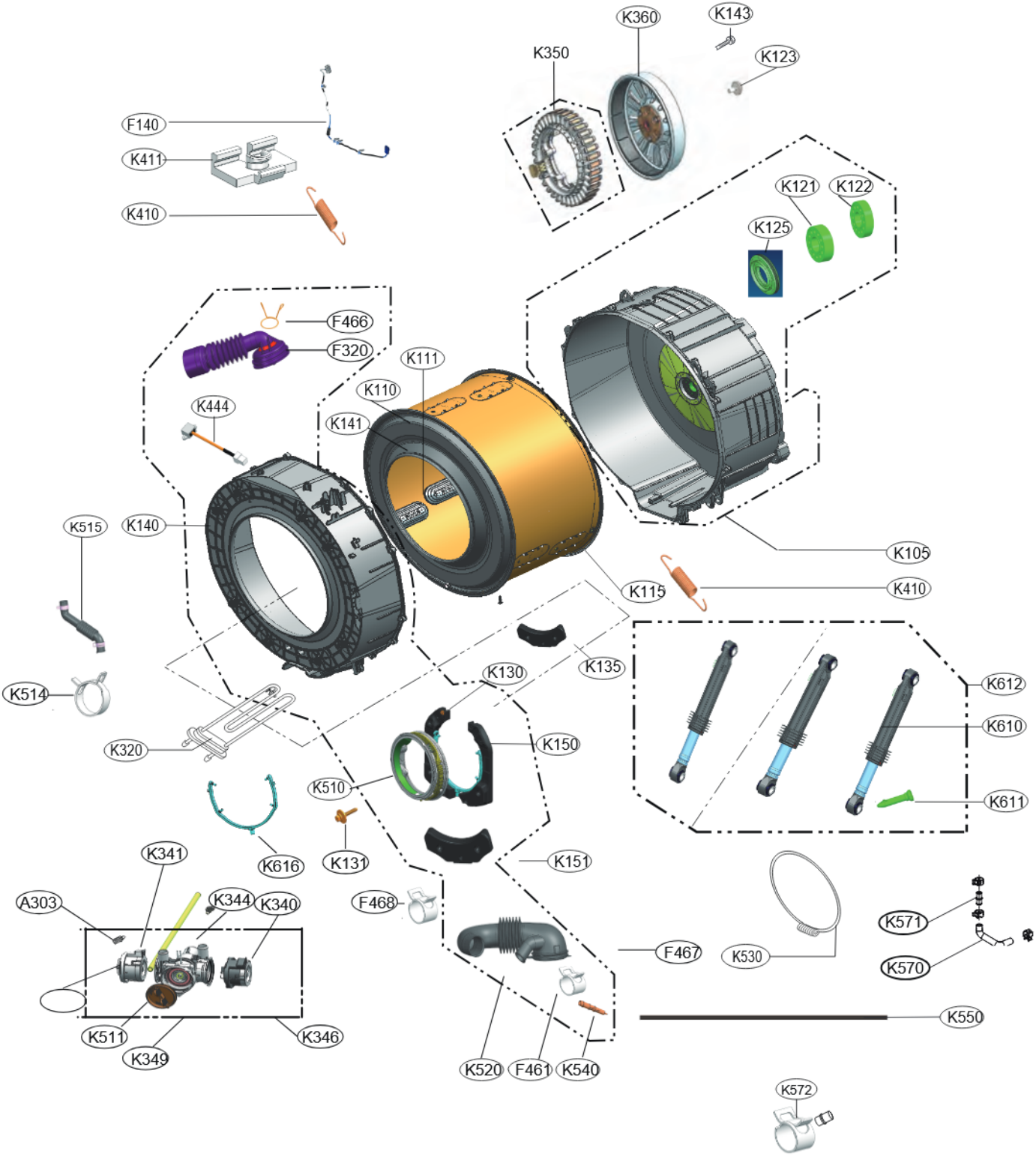
K360
K143
K350
K123
F140
K411
K410
K121
K122
K125
F466
F320
K111
K110
K444
K141
K515
K140
K105
K115
K410
K135
K130
K514
K612
K610
K320
K150
K510
K611
K616
K131
K151
K341
A303
K344
K340
F468
K571
F467
K530
K570
K511
K349
K346
K550
K520
F461
K540
K572