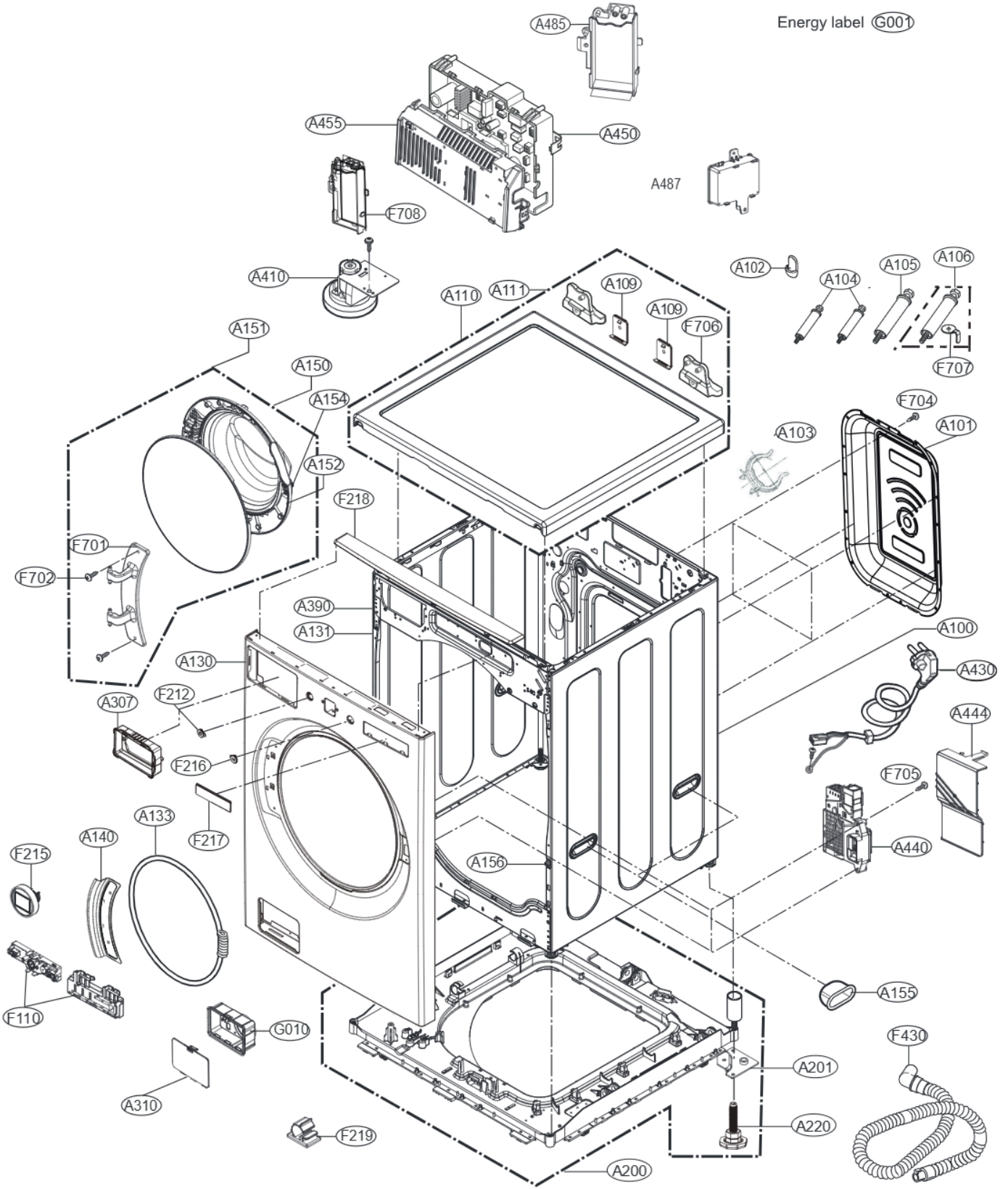
Energy label G001
A485
A455
A450
A487
F708
A410
A110
A111
A109
A109
F706
A102
A104
A105
A106
F707
A151
A150
A154
A152
F704
A101
A103
F218
F701
F702
A390
A131
A100
A130
A430
F212
A307
A444
F216
F705
A133
A140
F217
F215
A440
A156
A155
F110
G010
F430
A201
A310
A220
F219
A200

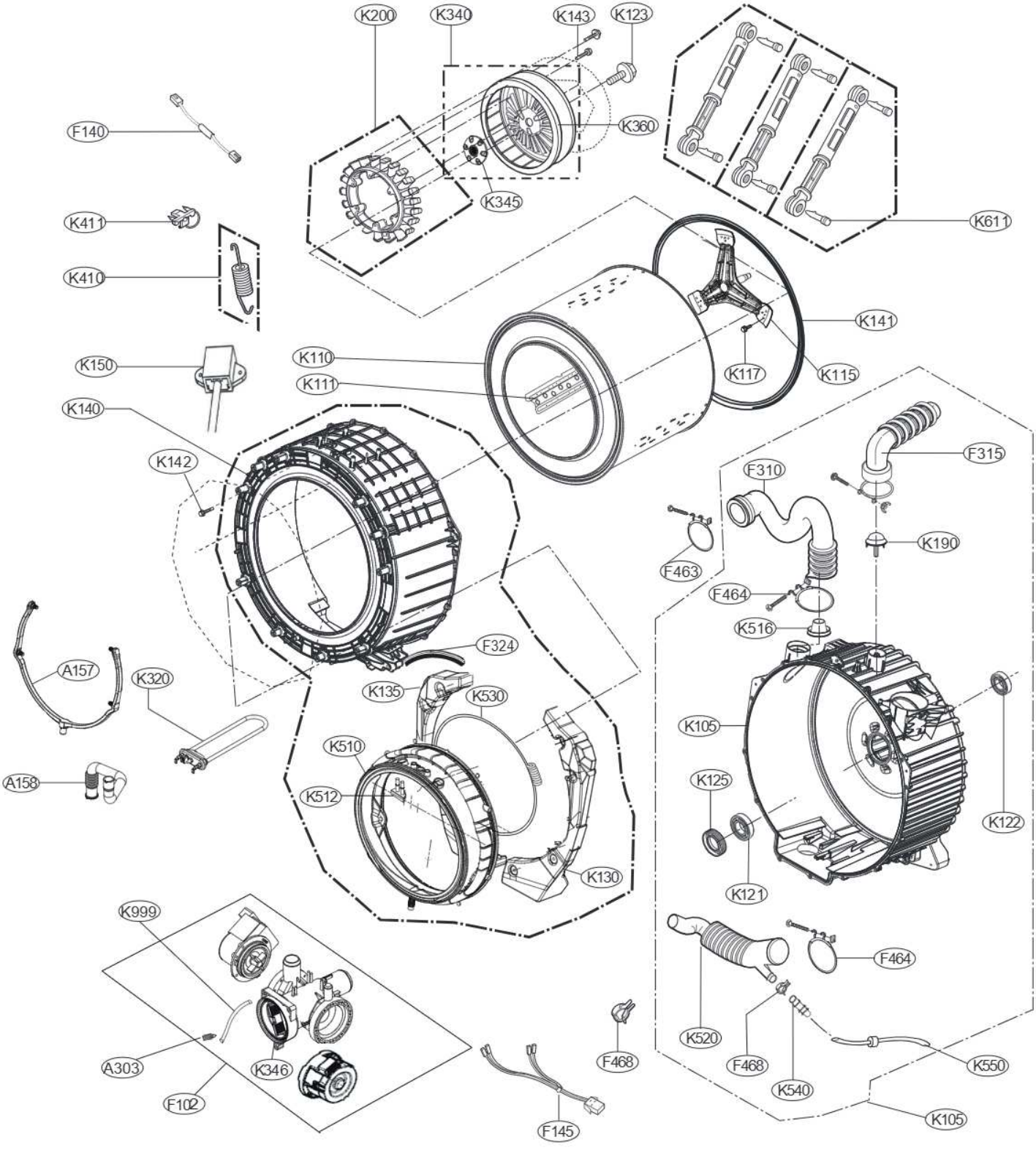
K200
K340
K143
K123
K360
K345
K611
F140
K411
K410
K141
K150
K110
K111
K117
K115
K140
K142
F315
F310
K190
F463
F464
K516
F324
A157
K320
K135
K530
K105
K510
A158
K512
K125
K122
K130
K121
K999
F464
K520
F468
K550
A303
K346
F468
K540
F102
F145
K105

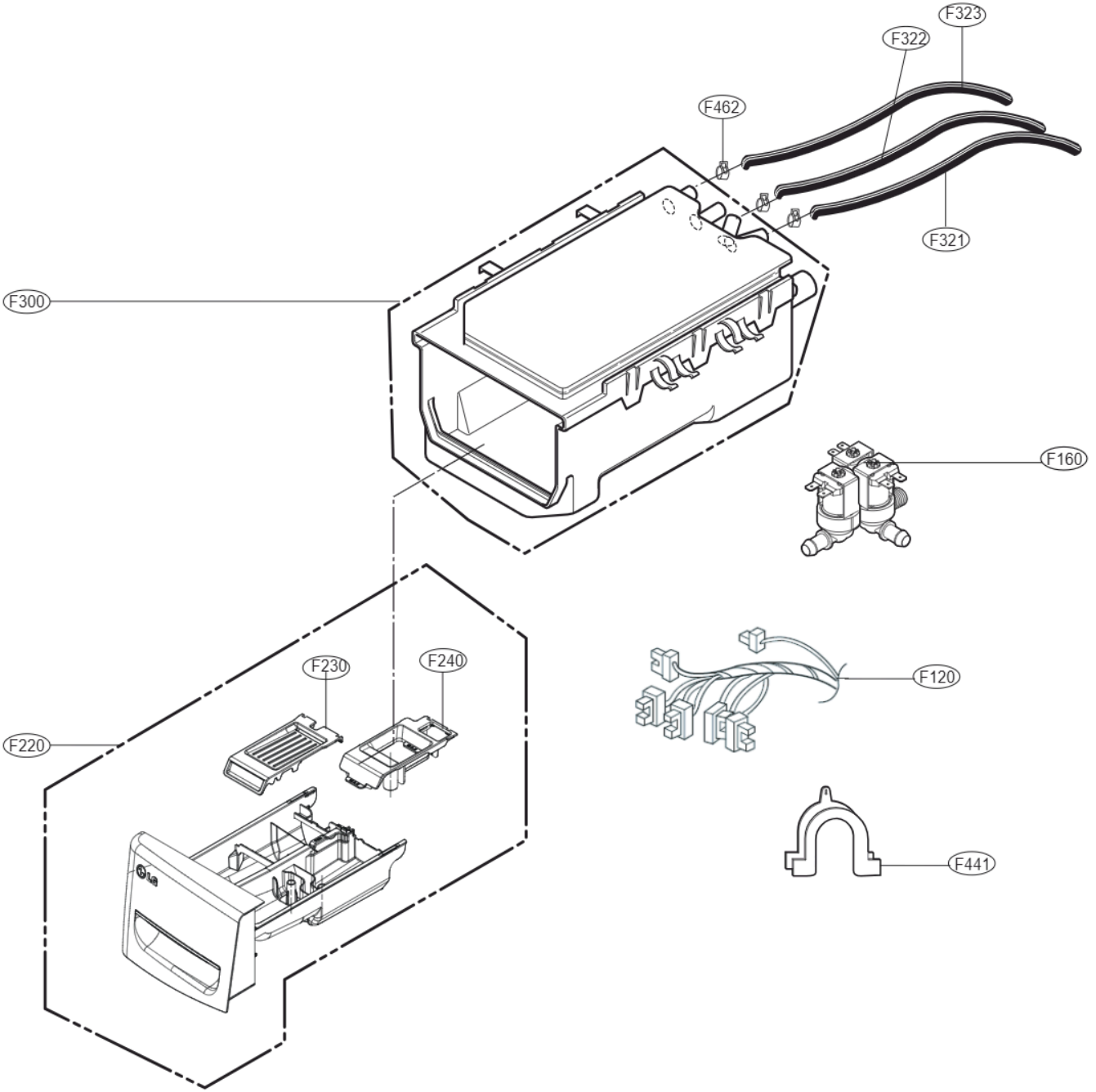
F323
F322
F462
F321
F300
F160
F230
F240
F120
F220
F441