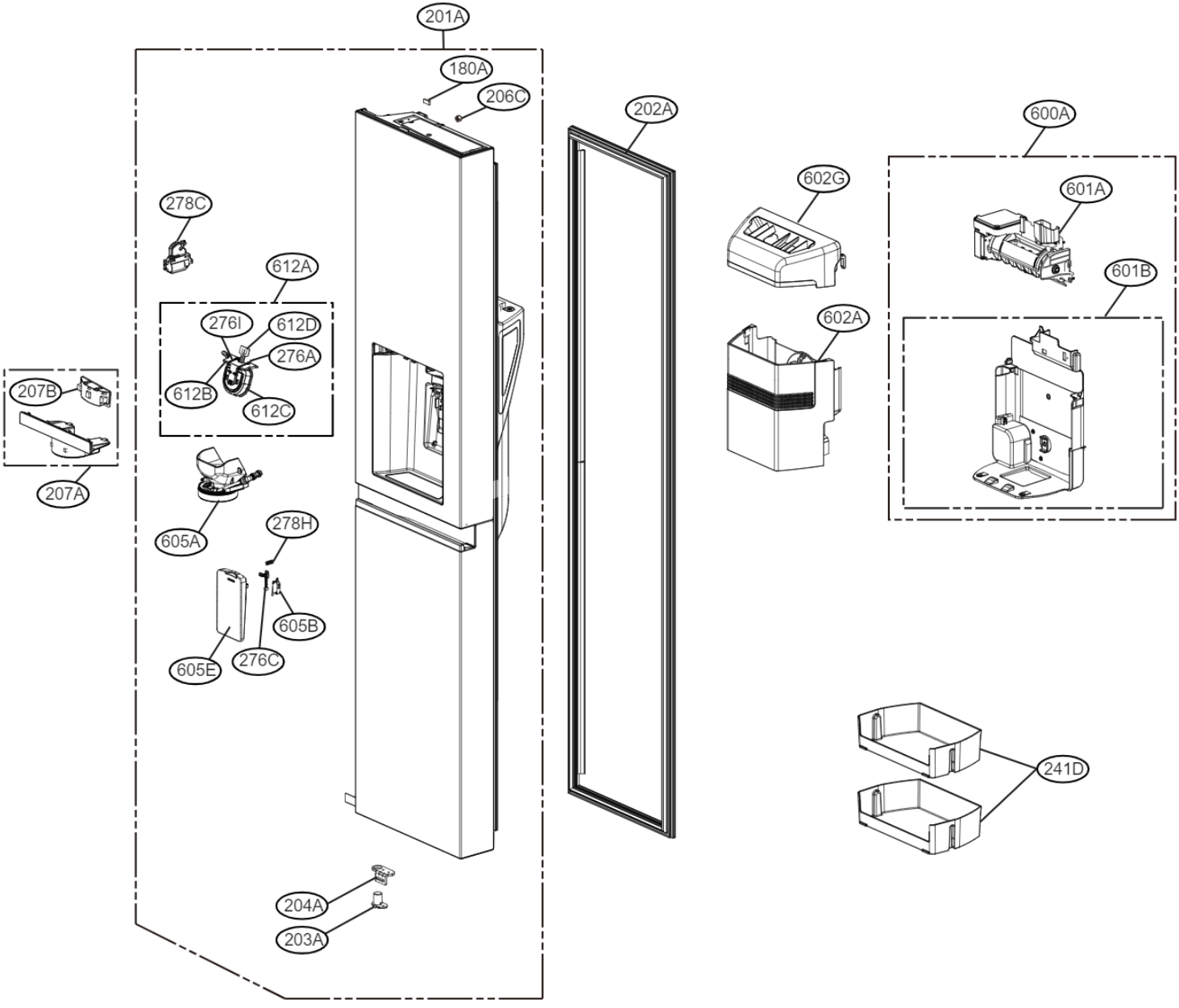
201A
180A
206C
202A
600A
602G
601A
601B
278C
612A
276I
612D
276A
612B
612C
602A
207B
207A
605A
278H
605B
605E
276C
241D
204A
203A

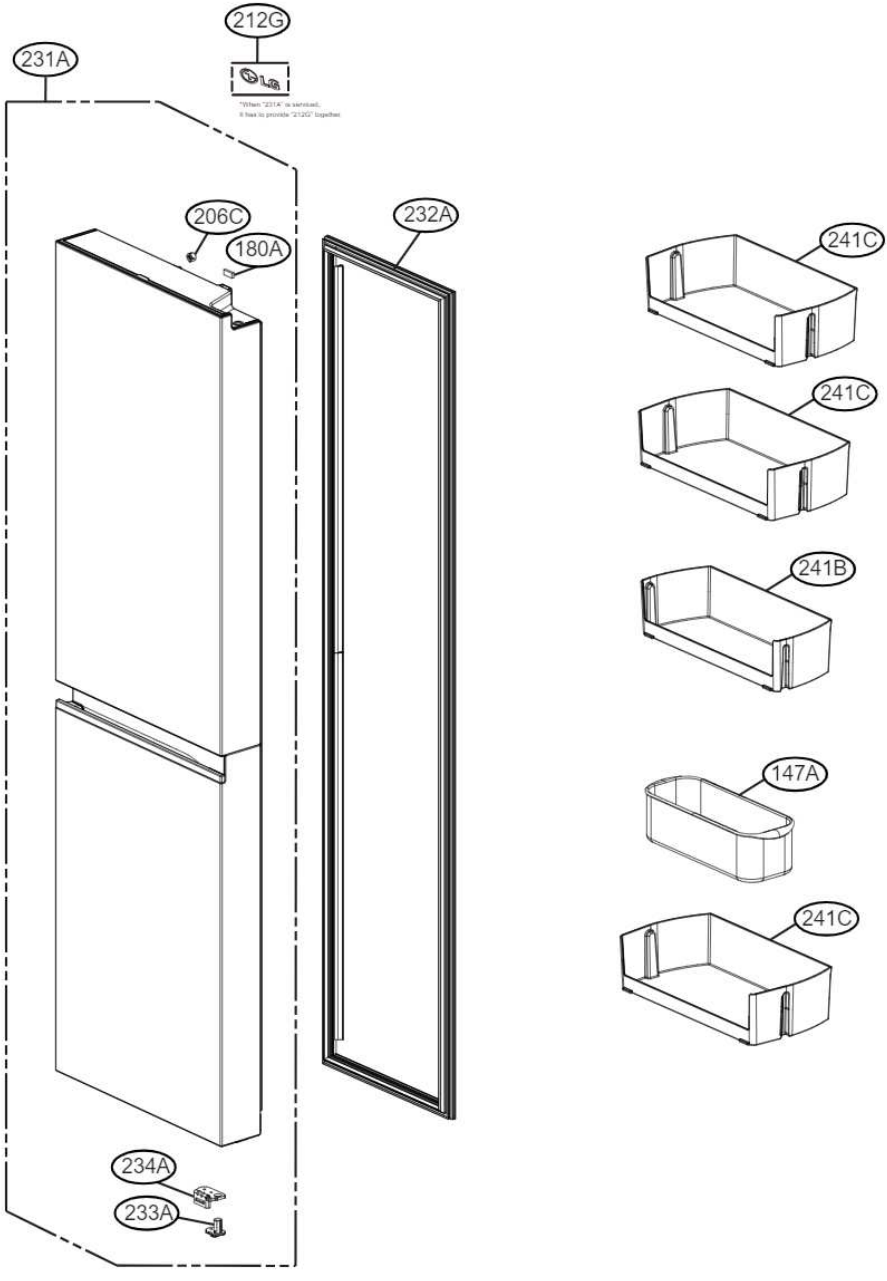
212G
231A
"When "231A" is serviced,
it has to provide "212G" together.
206C
180A
232A
241C
241C
241B
147A
241C
234A
233A

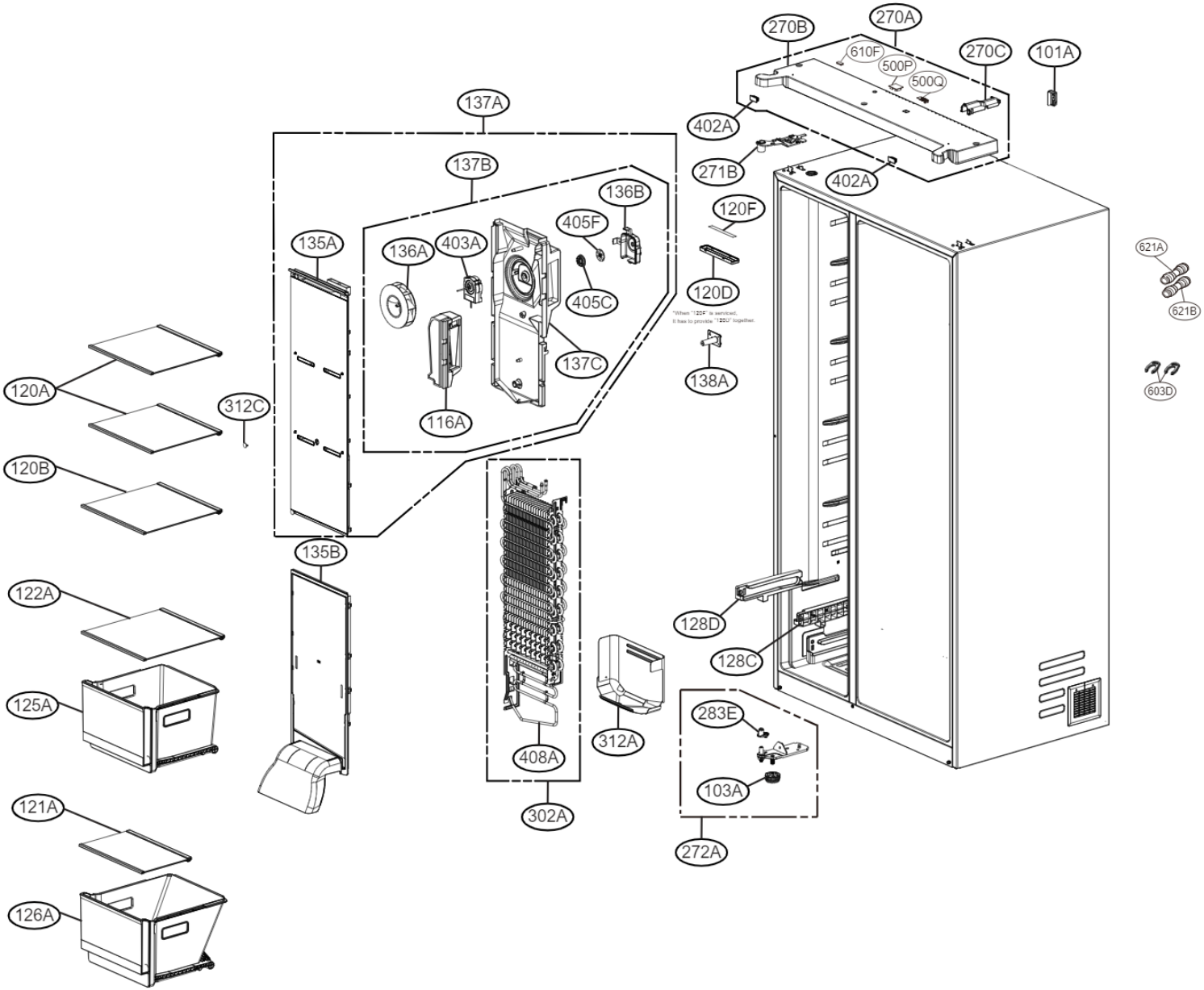
270B
270A
610F
500P
500Q
270C
101A
137A
402A
137B
271B
402A
136B
120F
405F
135A
136A
403A
621A
120D
405C
621B
"When "120F" is serviced,
it has to provide "120D" together."
137C
603D
138A
120A
312C
116A
120B
135B
122A
128D
128C
125A
283E
312A
408A
103A
121A
302A
272A
126A

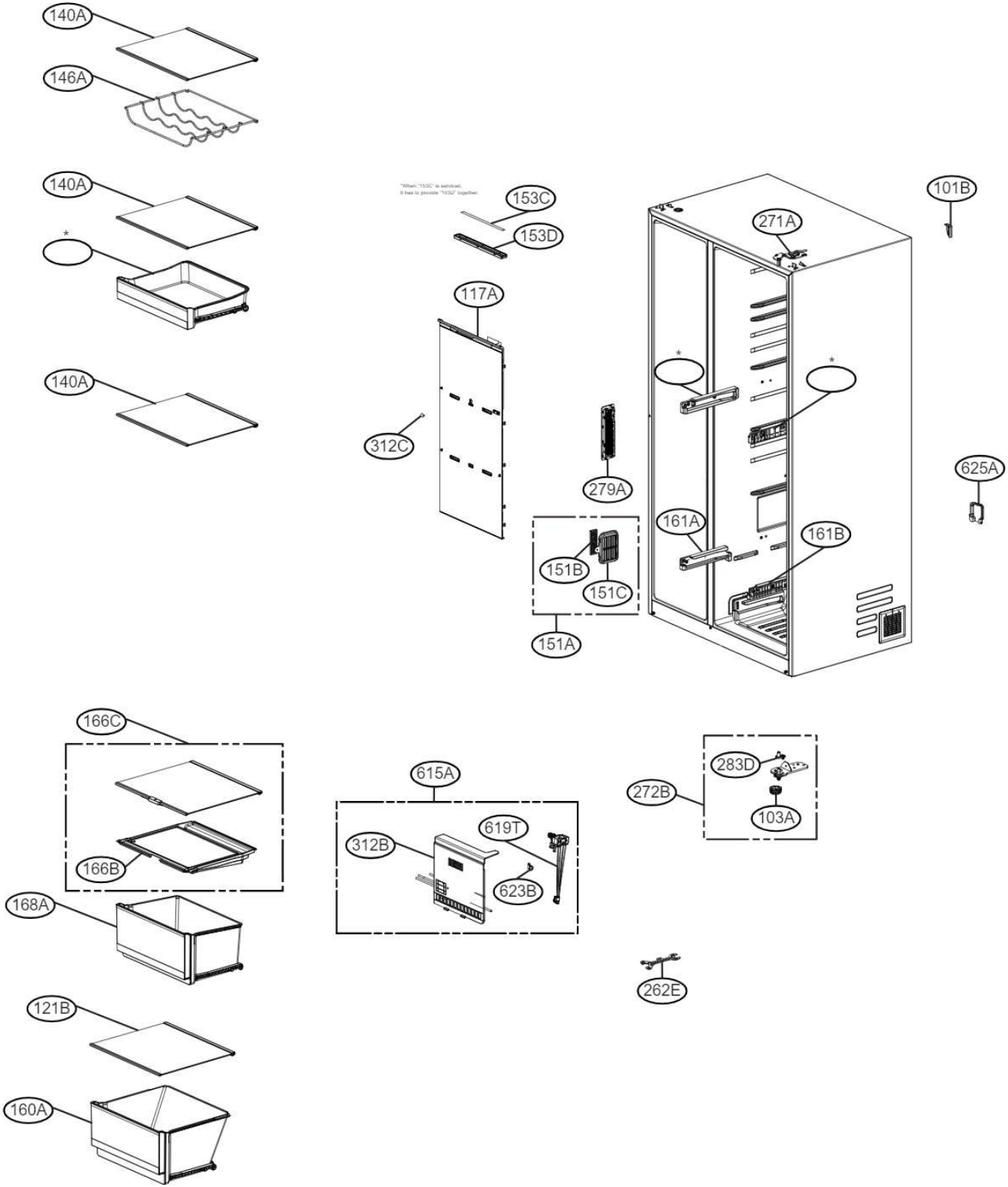
140A
146A
140A
*
140A
"When "153C" is serviced,
it has to provide "153D" together."
153C
153D
117A
312C
271A
101B
*
*
279A
625A
161A
161B
151B
151C
151A
166C
166B
168A
121B
160A
615A
312B
619T
623B
283D
272B
103A
262E

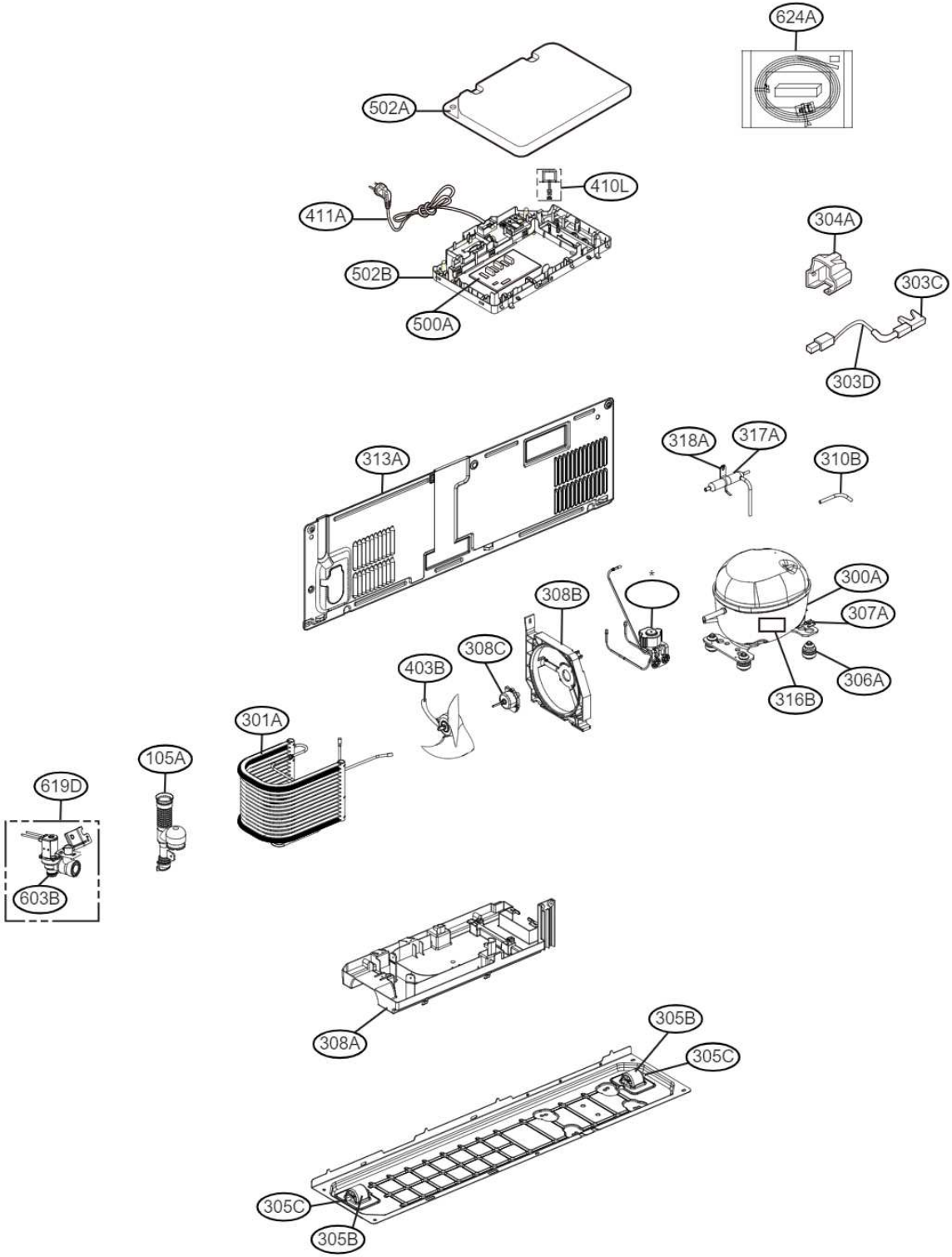
624A
502A
410L
411A
502B
500A
304A
303C
303D
313A
318A
317A
310B
308B
*
300A
307A
308C
403B
306A
316B
301A
105A
619D
603B
308A
305B
305C
305C
305B