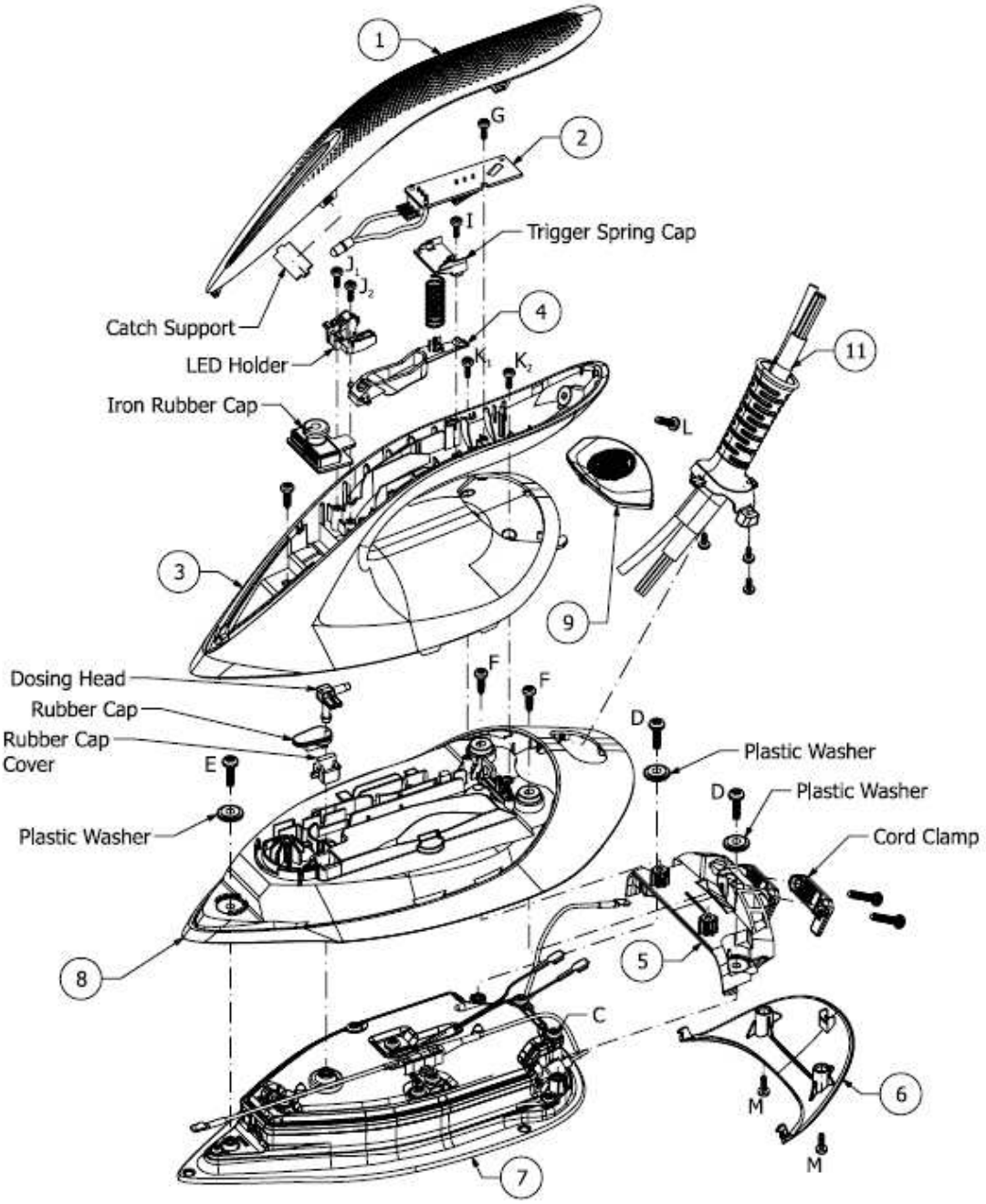
1
G
2
I
Trigger Spring Cap
J1
J2
Catch Support
4
LED Holder
K1
K2
11
Iron Rubber Cap
L
3
9
Dosing Head
F
F
Rubber Cap
Rubber Cap
Cover
D
Plastic Washer
E
D
Plastic Washer
Plastic Washer
Cord Clamp
8
5
C
6
M
M
7

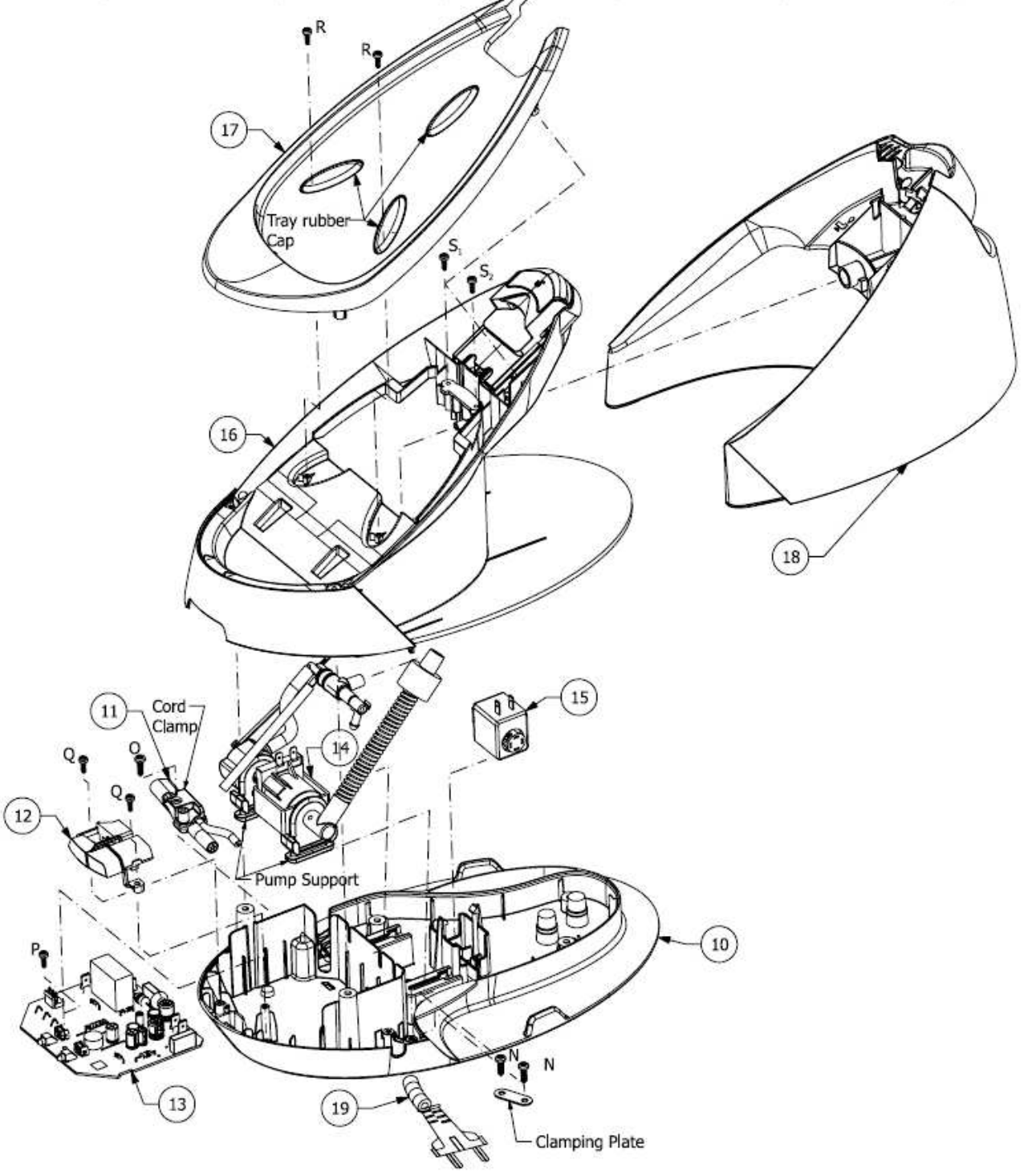
R
R
17
Tray rubber
Cap
S1
S2
16
18
15
11
Cord
Clamp
Q
Q
Q
14
12
Pump Support
P
10
N
N
13
19
Clamping Plate