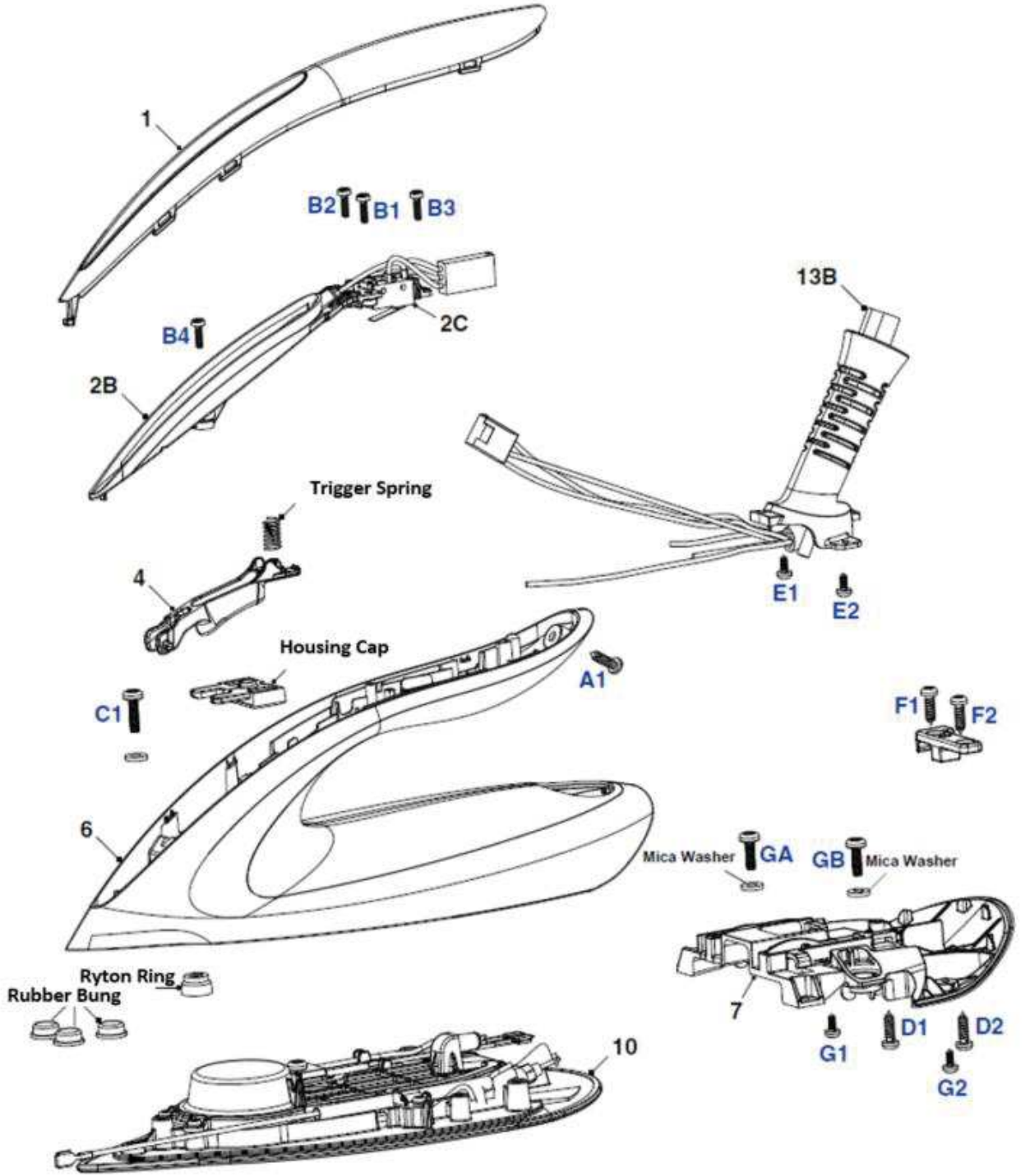
1
B2
B1
B3
B4
2C
2B
13B
Trigger Spring
4
E1
E2
Housing Cap
A1
C1
F1
F2
6
Mica Washer
GA
GB
Mica Washer
Ryton Ring
Rubber Bung
7
G1
D1
D2
G2
10

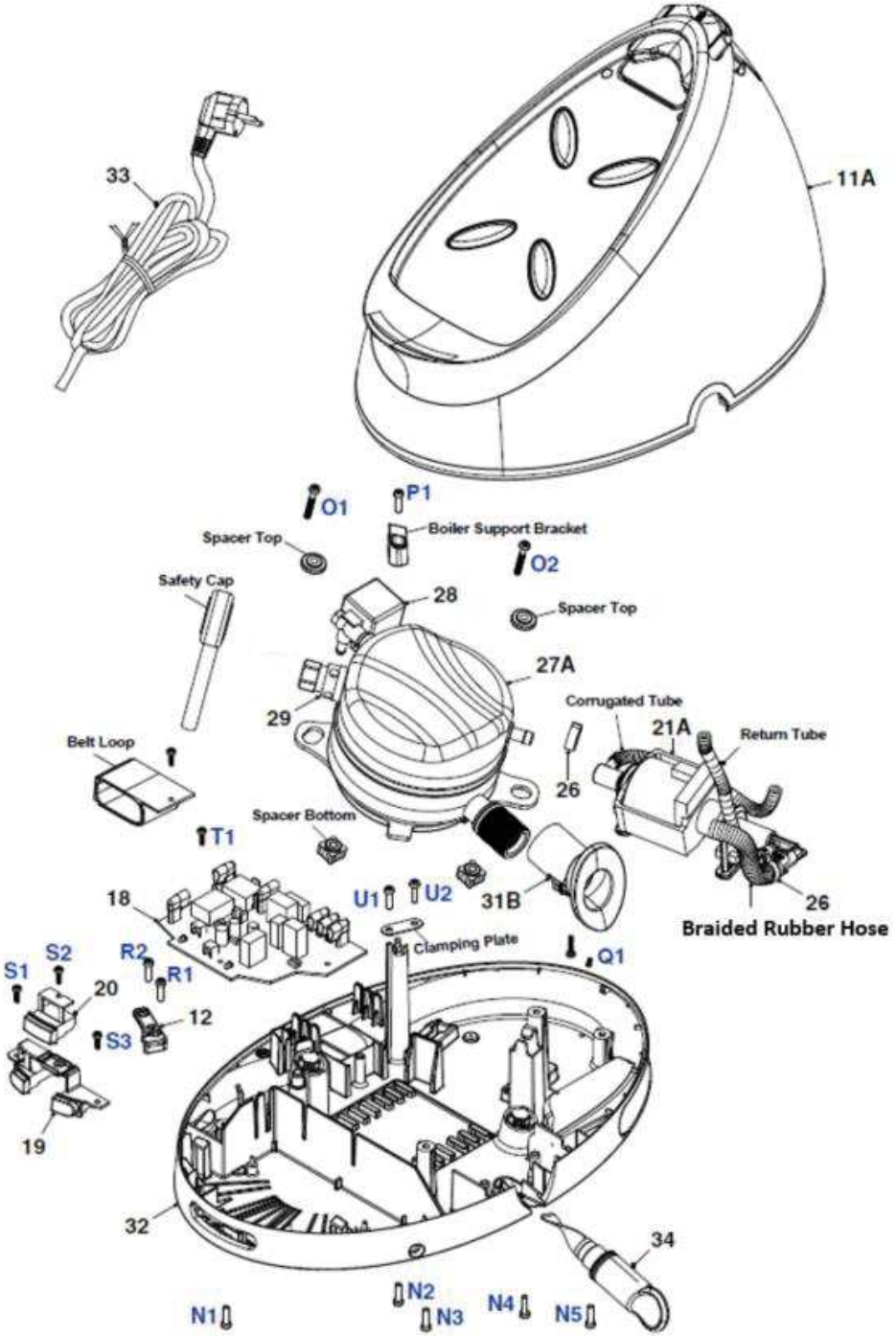
33
11A
O1
P1
Boiler Support Bracket
Spacer Top
O2
Safety Cap
28
Spacer Top
27A
29
Corrugated Tube
21A
Return Tube
Belt Loop
26
Spacer Bottom
T1
U1
U2
31B
26
Braided Rubber Hose
18
Clamping Plate
Q1
S2
R2
S1
R1
20
12
S3
19
32
34
N2
N1
N3
N4
N5