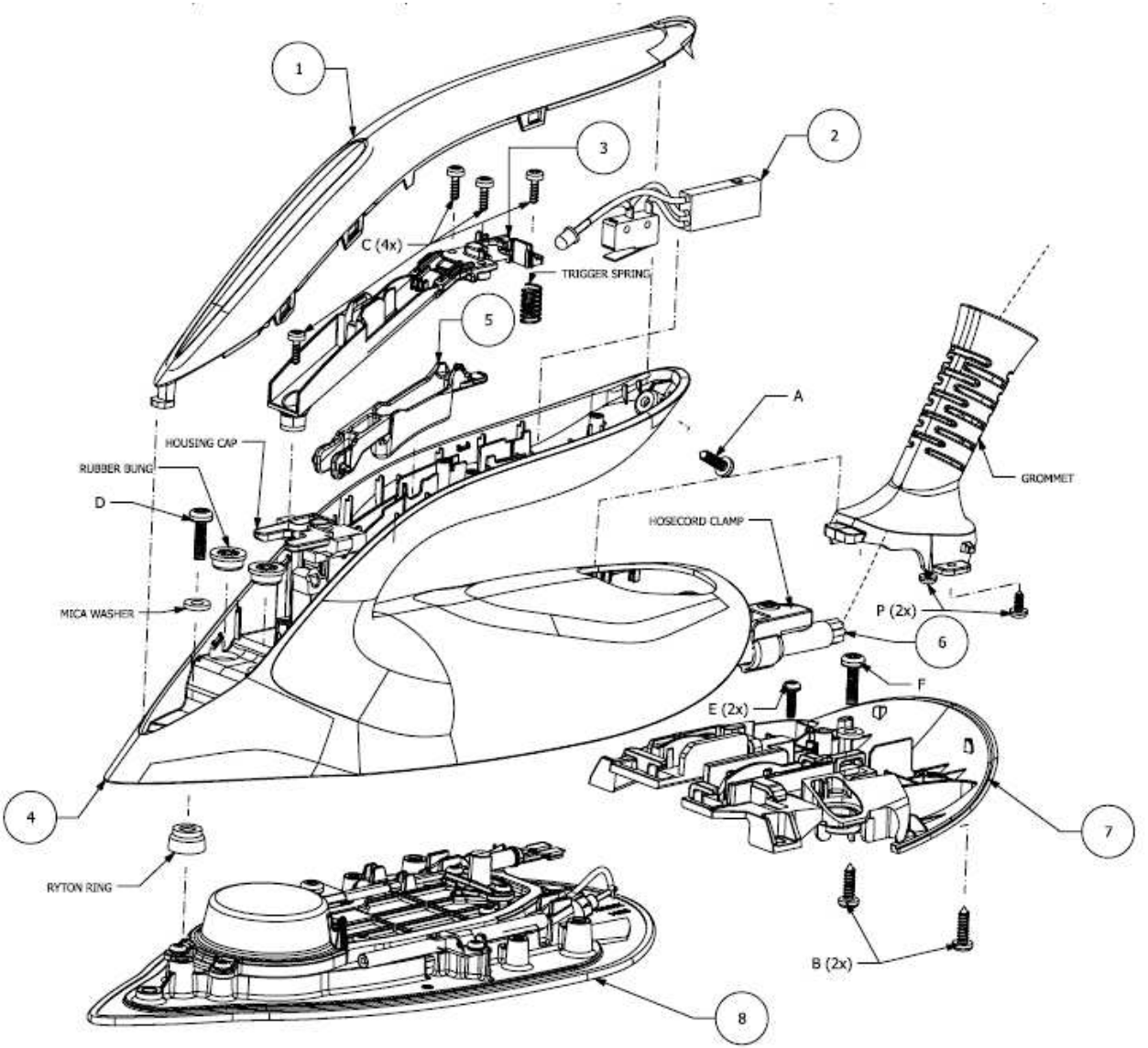
1
2
3
C (4x)
TRIGGER SPRING
5
A
HOUSING CAP
RUBBER BUNG
D
GROMMET
HOSECORD CLAMP
MICA WASHER
P (2x)
6
F
E (2x)
4
7
RYTON RING
B (2x)
8

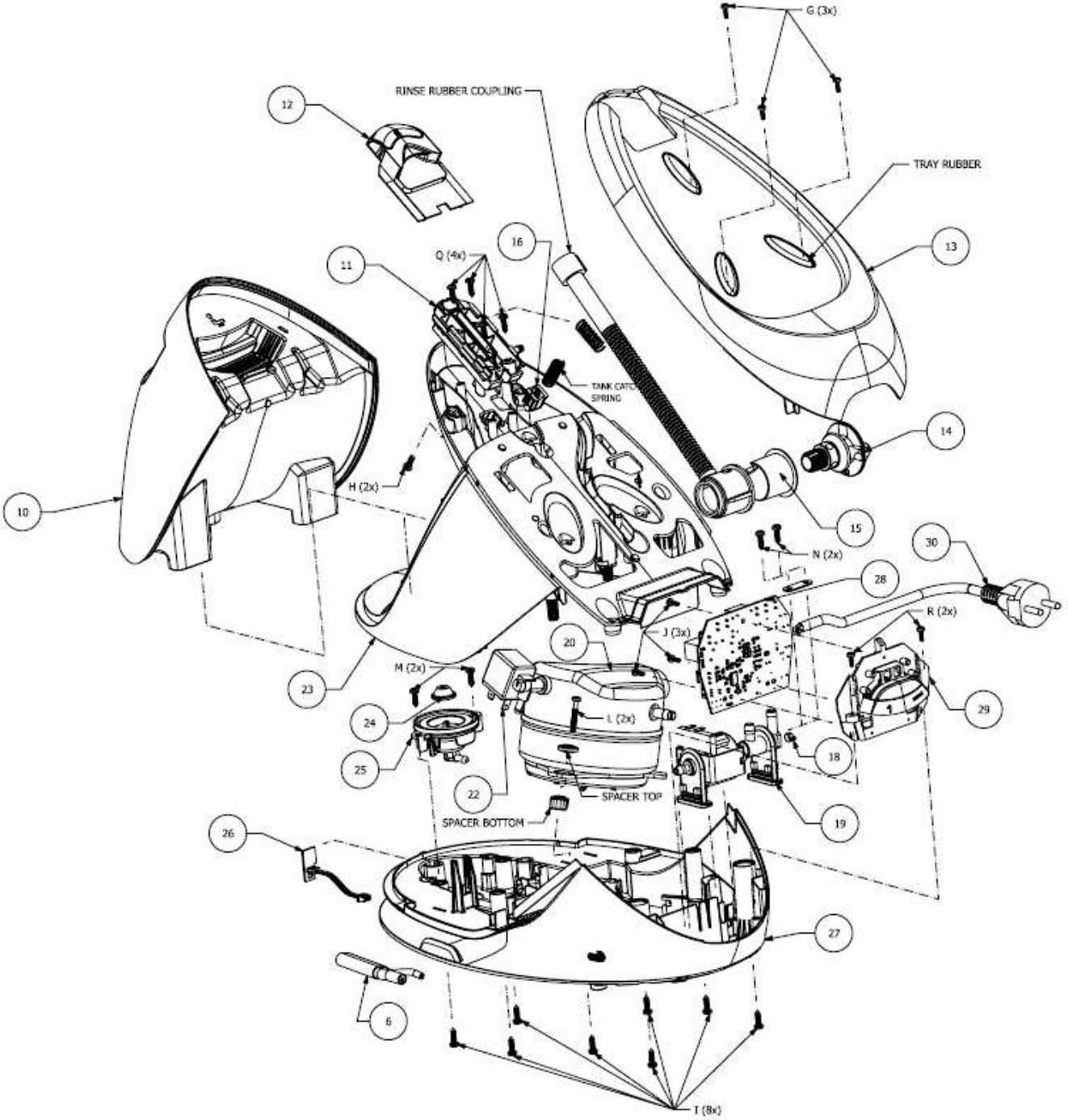
G (3x)
RINSE RUBBER COUPLING
12
TRAY RUBBER
13
16
Q (4x)
11
TANK CATCH
SPRING
14
H (2x)
10
15
N (2x)
30
28
R (2x)
J (3x)
20
M (2x)
23
29
24
L (2x)
25
18
22
SPACER TOP
SPACER BOTTOM
19
26
27
6
T (8x)