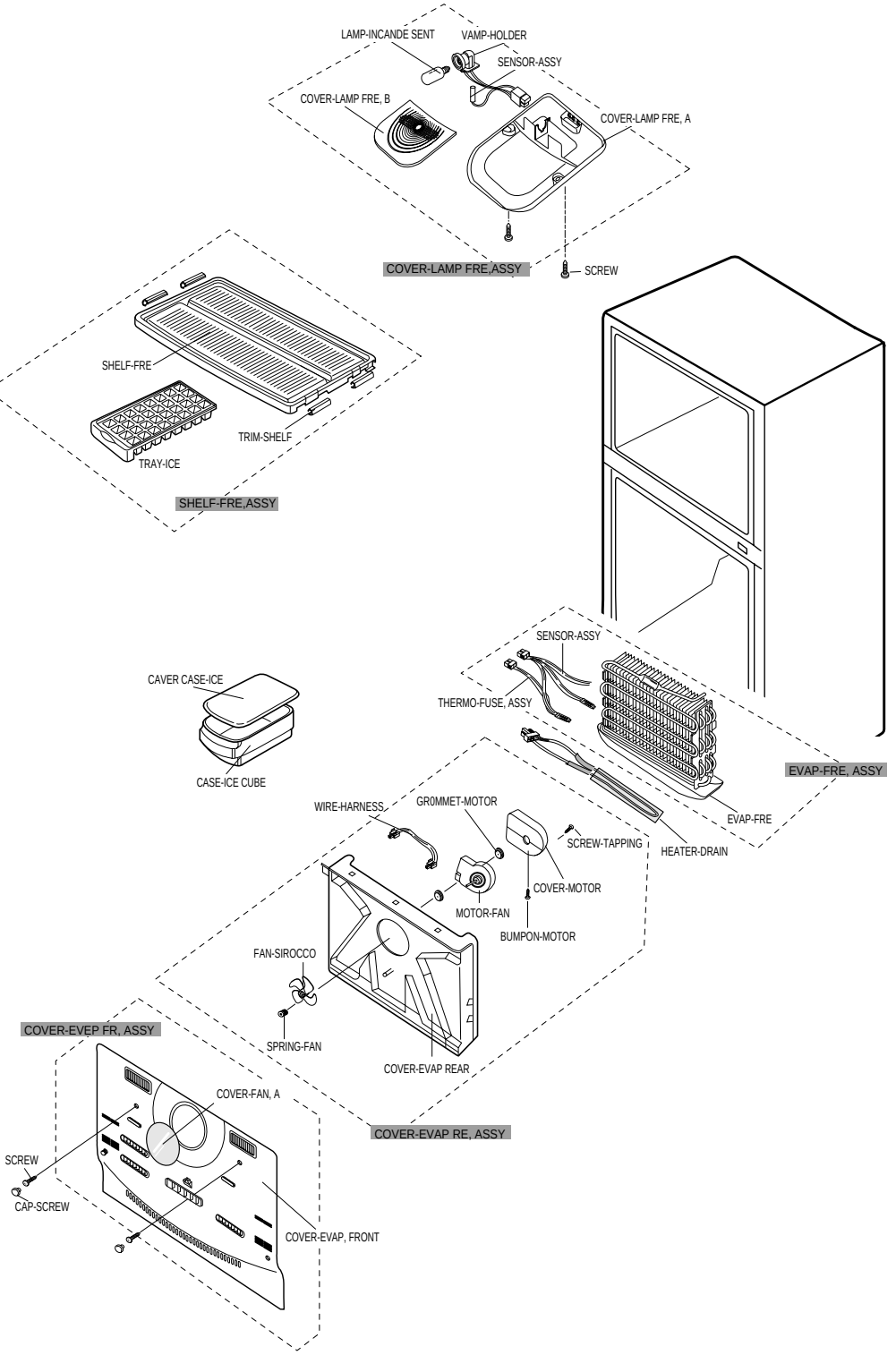
LAMP-INCANDE SENT
VAMP-HOLDER
SENSOR-ASSY
COVER-LAMP FRE, B
COVER-LAMP FRE, A
COVER-LAMP FRE,ASSY
SCREW
SHELF-FRE
TRIM-SHELF
TRAY-ICE
SHELF-FRE,ASSY
SENSOR-ASSY
CAVER CASE-ICE
THERMO-FUSE, ASSY
CASE-ICE CUBE
EVAP-FRE, ASSY
EVAP-FRE
WIRE-HARNESS
GR0MMET-MOTOR
SCREW-TAPPING
HEATER-DRAIN
COVER-MOTOR
MOTOR-FAN
BUMPON-MOTOR
FAN-SIROCCO
SPRING-FAN
COVER-EVAP REAR
COVER-EVAP RE, ASSY
COVER-EVEP FR, ASSY
COVER-FAN, A
SCREW
CAP-SCREW
COVER-EVAP, FRONT

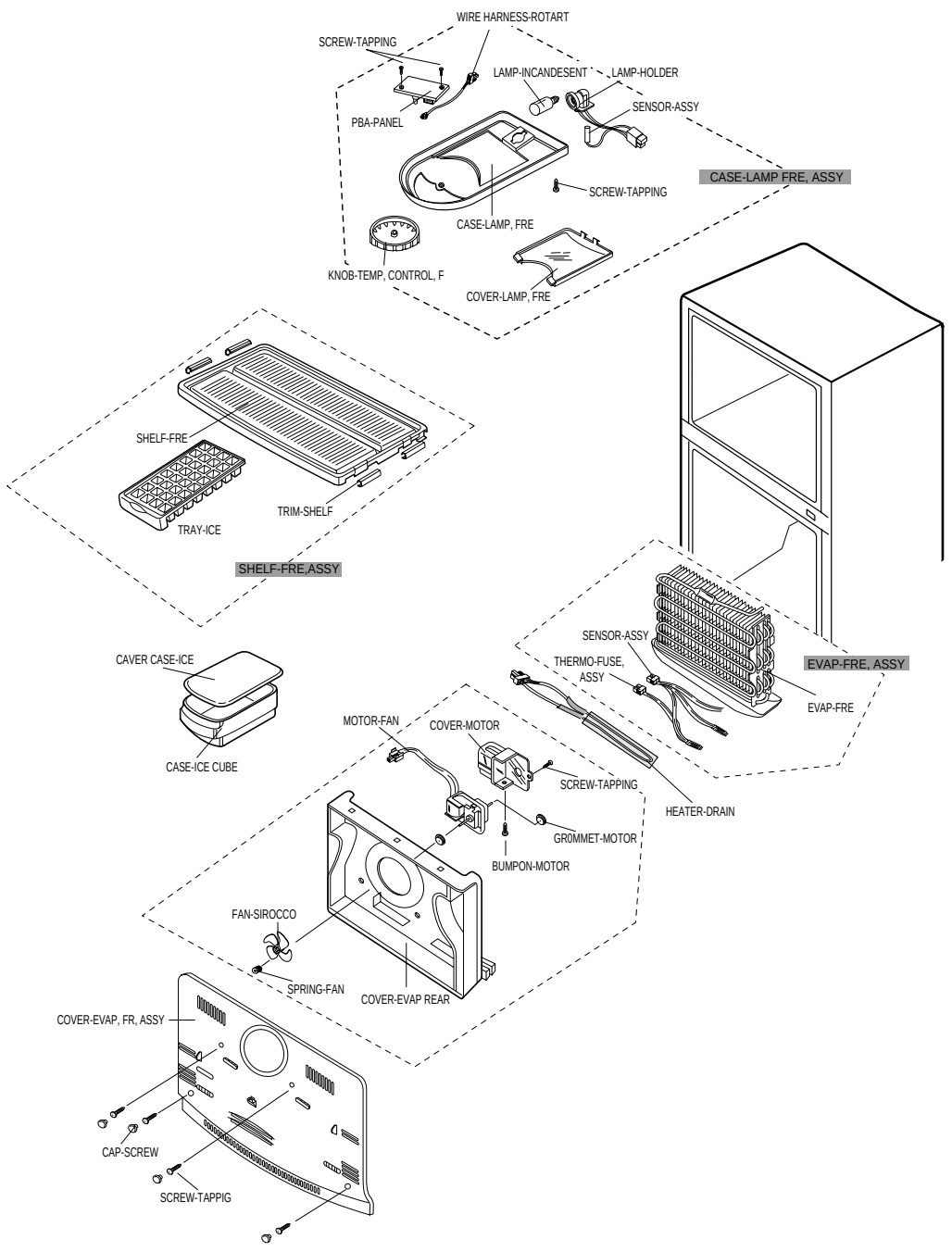
WIRE HARNESS-ROTART
SCREW-TAPPING
LAMP-INCANDESENT
LAMP-HOLDER
SENSOR-ASSY
PBA-PANEL
CASE-LAMP FRE, ASSY
SCREW-TAPPING
CASE-LAMP, FRE
KNOB-TEMP, CONTROL, F
COVER-LAMP, FRE
SHELF-FRE
TRIM-SHELF
TRAY-ICE
SHELF-FRE,ASSY
SENSOR-ASSY
THERMO-FUSE, ASSY
EVAP-FRE, ASSY
EVAP-FRE
CAVER CASE-ICE
CASE-ICE CUBE
MOTOR-FAN
COVER-MOTOR
SCREW-TAPPING
HEATER-DRAIN
GROMMET-MOTOR
BUMPON-MOTOR
FAN-SIROCCO
SPRING-FAN
COVER-EVAP REAR
COVER-EVAP, FR, ASSY
CAP-SCREW
SCREW-TAPPIG

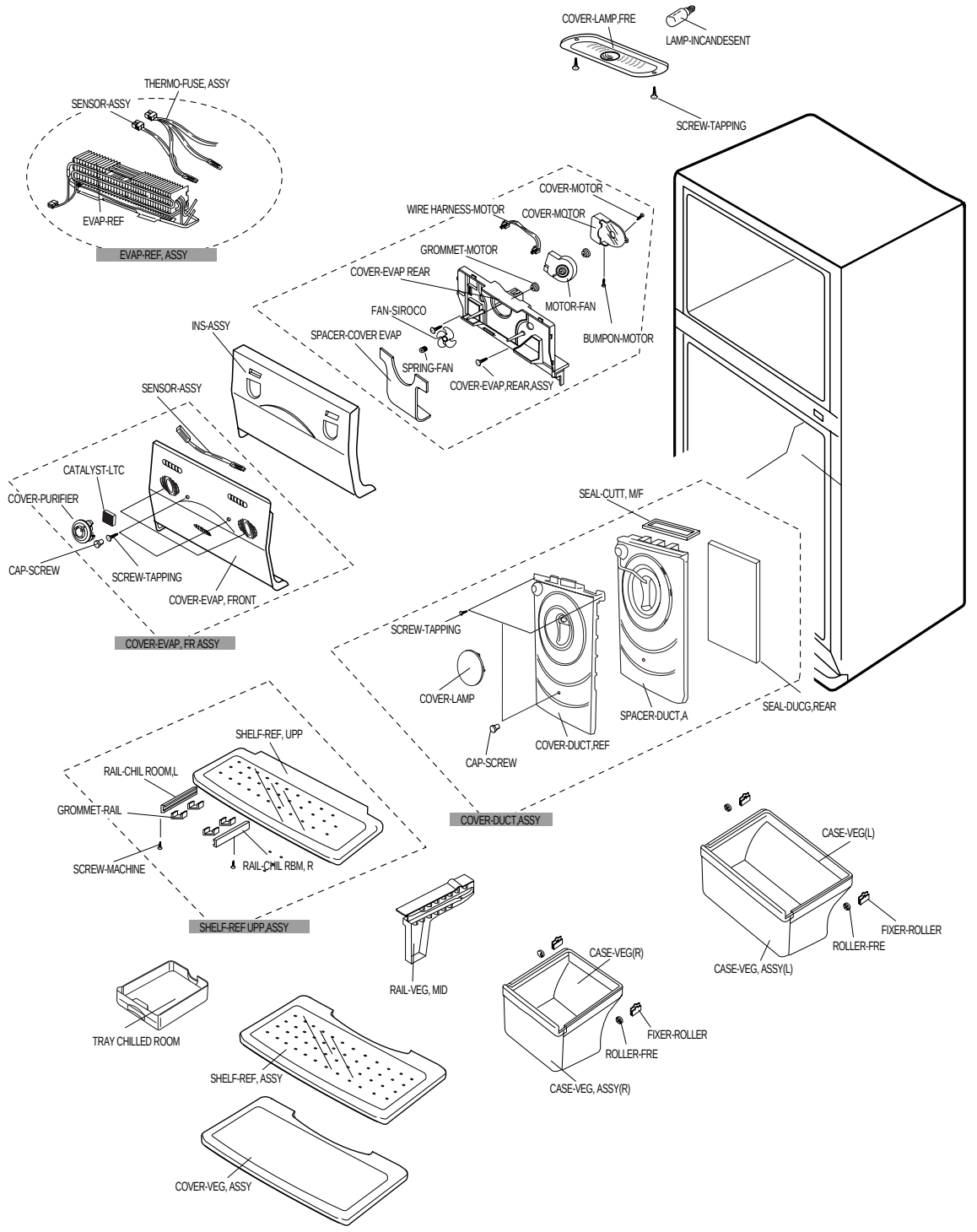
COVER-LAMP,FRE
LAMP-INCANDESENT
SCREW-TAPPING
THERMO-FUSE, ASSY
SENSOR-ASSY
EVAP-REF
EVAP-REF, ASSY
COVER-MOTOR
WIRE HARNESS-MOTOR
COVER-MOTOR
GROMMET-MOTOR
COVER-EVAP REAR
MOTOR-FAN
FAN-SIROCO
BUMPON-MOTOR
INS-ASSY
SPACER-COVER EVAP
SPRING-FAN
COVER-EVAP,REAR,ASSY
SENSOR-ASSY
CATALYST-LTC
COVER-PURIFIER
CAP-SCREW
SCREW-TAPPING
COVER-EVAP, FRONT
COVER-EVAP, FR ASSY
SEAL-CUTT, M/F
SCREW-TAPPING
COVER-LAMP
SPACER-DUCT,A
SEAL-DUCG,REAR
CAP-SCREW
COVER-DUCT,REF
COVER-DUCT,ASSY
SHELF-REF, UPP
RAIL-CHIL ROOM,L
GROMMET-RAIL
SCREW-MACHINE
RAIL-CHIL RBM, R
SHELF-REF UPP,ASSY
CASE-VEG(L)
FIXER-ROLLER
ROLLER-FRE
CASE-VEG, ASSY(L)
RAIL-VEG, MID
CASE-VEG(R)
FIXER-ROLLER
ROLLER-FRE
CASE-VEG, ASSY(R)
TRAY CHILLED ROOM
SHELF-REF, ASSY
COVER-VEG, ASSY

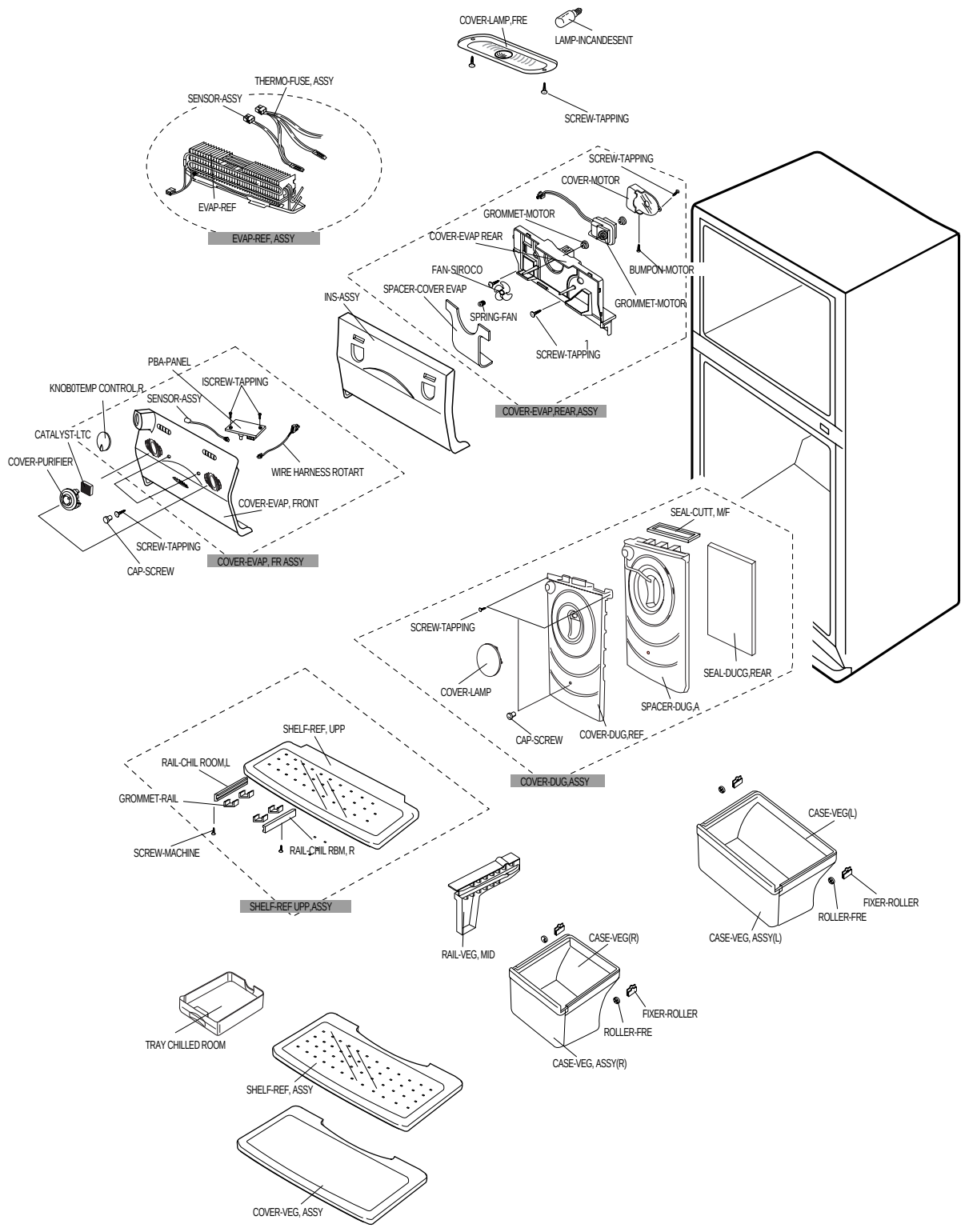
COVER-LAMP,FRE
LAMP-INCANDESENT
SCREW-TAPPING
THERMO-FUSE, ASSY
SENSOR-ASSY
EVAP-REF
EVAP-REF, ASSY
SCREW-TAPPING
COVER-MOTOR
GROMMET-MOTOR
COVER-EVAP REAR
FAN-SIROCO
SPACER-COVER EVAP
INS-ASSY
SPRING-FAN
BUMPON-MOTOR
GROMMET-MOTOR
SCREW-TAPPING
COVER-EVAP,REAR,ASSY
PBA-PANEL
ISCREW-TAPPING
KNOB0TEMP CONTROL,R
SENSOR-ASSY
CATALYST-LTC
COVER-PURIFIER
WIRE HARNESS ROTART
COVER-EVAP, FRONT
SCREW-TAPPING
CAP-SCREW
COVER-EVAP, FR ASSY
SEAL-CUTT, MF
SCREW-TAPPING
COVER-LAMP
SEAL-DUCG,REAR
SPACER-DUG,A
CAP-SCREW
COVER-DUG,REF
COVER-DUG,ASSY
SHELF-REF, UPP
RAIL-CHIL ROOM,L
GROMMET-RAIL
SCREW-MACHINE
RAIL-CHIL RBM, R
SHELF-REF,UPP,ASSY
CASE-VEG(L)
FIXER-ROLLER
ROLLER-FRE
CASE-VEG, ASSY(L)
RAIL-VEG, MID
CASE-VEG(R)
FIXER-ROLLER
ROLLER-FRE
CASE-VEG, ASSY(R)
TRAY CHILLED ROOM
SHELF-REF, ASSY
COVER-VEG, ASSY

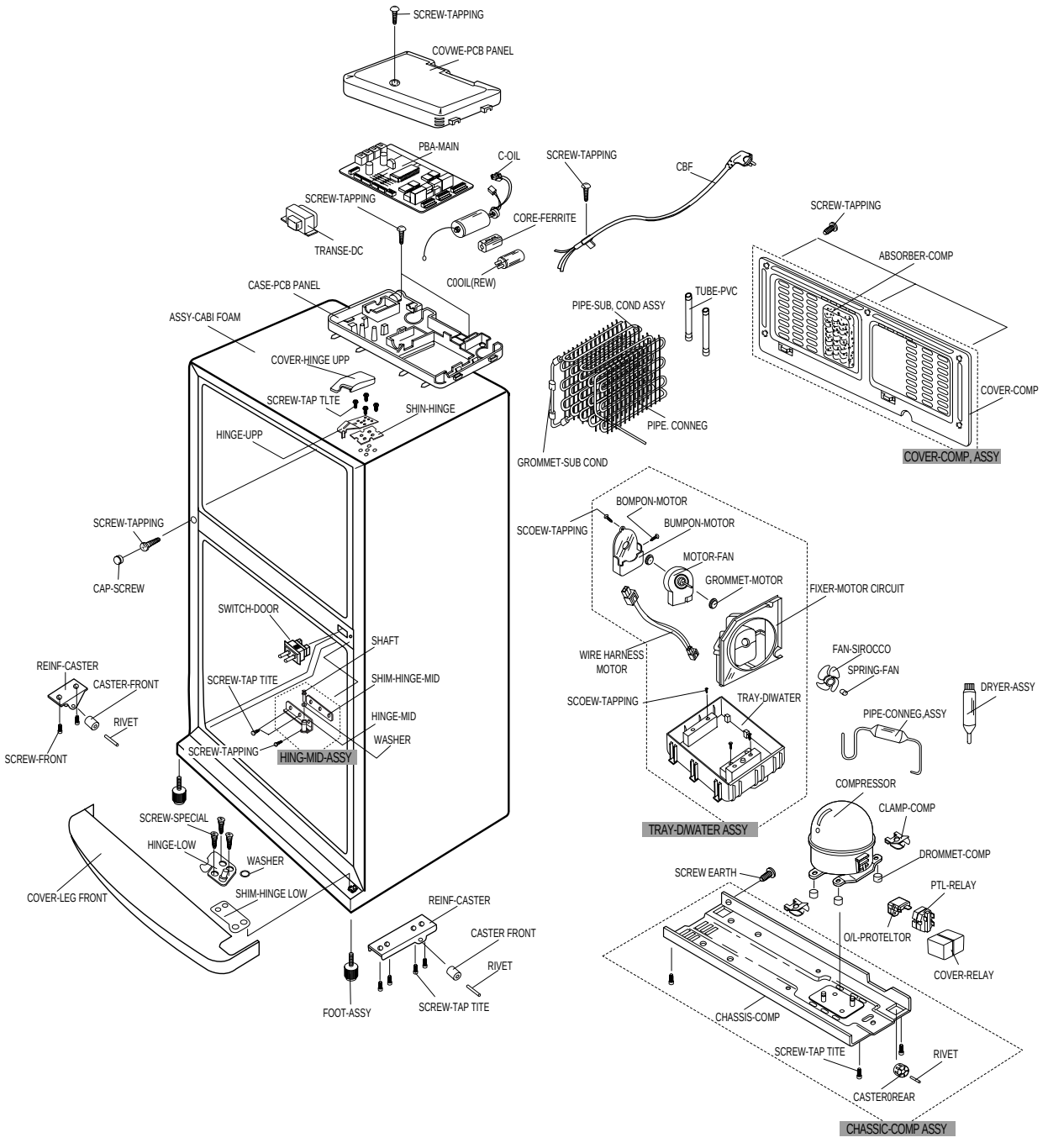
SCREW-TAPPING
COVWE-PCB PANEL
PBA-MAIN
C-OIL
SCREW-TAPPING
CBF
SCREW-TAPPING
CORE-FERRITE
TRANSE-DC
C0OIL(REW)
SCREW-TAPPING
ABSORBER-COMP
CASE-PCB PANEL
ASSY-CABI FOAM
TUBE-PVC
PIPE-SUB. COND ASSY
COVER-HINGE UPP
COVER-COMP
SCREW-TAP TLTE
SHIN-HINGE
PIPE. CONNEG
HINGE-UPP
GROMMET-SUB COND
COVER-COMP, ASSY
BOMPON-MOTOR
SCOEW-TAPPING
BUMPON-MOTOR
SCREW-TAPPING
MOTOR-FAN
GROMMET-MOTOR
CAP-SCREW
FIXER-MOTOR CIRCUIT
SWITCH-DOOR
SHAFT
WIRE HARNESS
MOTOR
FAN-SIROCCO
REINF-CASTER
SPRING-FAN
CASTER-FRONT
SCREW-TAP TITE
SHIM-HINGE-MID
DRYER-ASSY
SCOEW-TAPPING
TRAY-DIWATER
RIVET
HINGE-MID
PIPE-CONNEG,ASSY
WASHER
SCREW-FRONT
SCREW-TAPPING
HING-MID-ASSY
TRAY-DIWATER ASSY
COMPRESSOR
SCREW-SPECIAL
CLAMP-COMP
HINGE-LOW
WASHER
DROMMET-COMP
SCREW EARTH
COVER-LEG FRONT
SHIM-HINGE LOW
PTL-RELAY
REINF-CASTER
CASTER FRONT
O/L-PROTELTOR
RIVET
COVER-RELAY
FOOT-ASSY
SCREW-TAP TITE
CHASSIS-COMP
SCREW-TAP TITE
RIVET
CASTER0REAR
CHASSIC-COMP ASSY

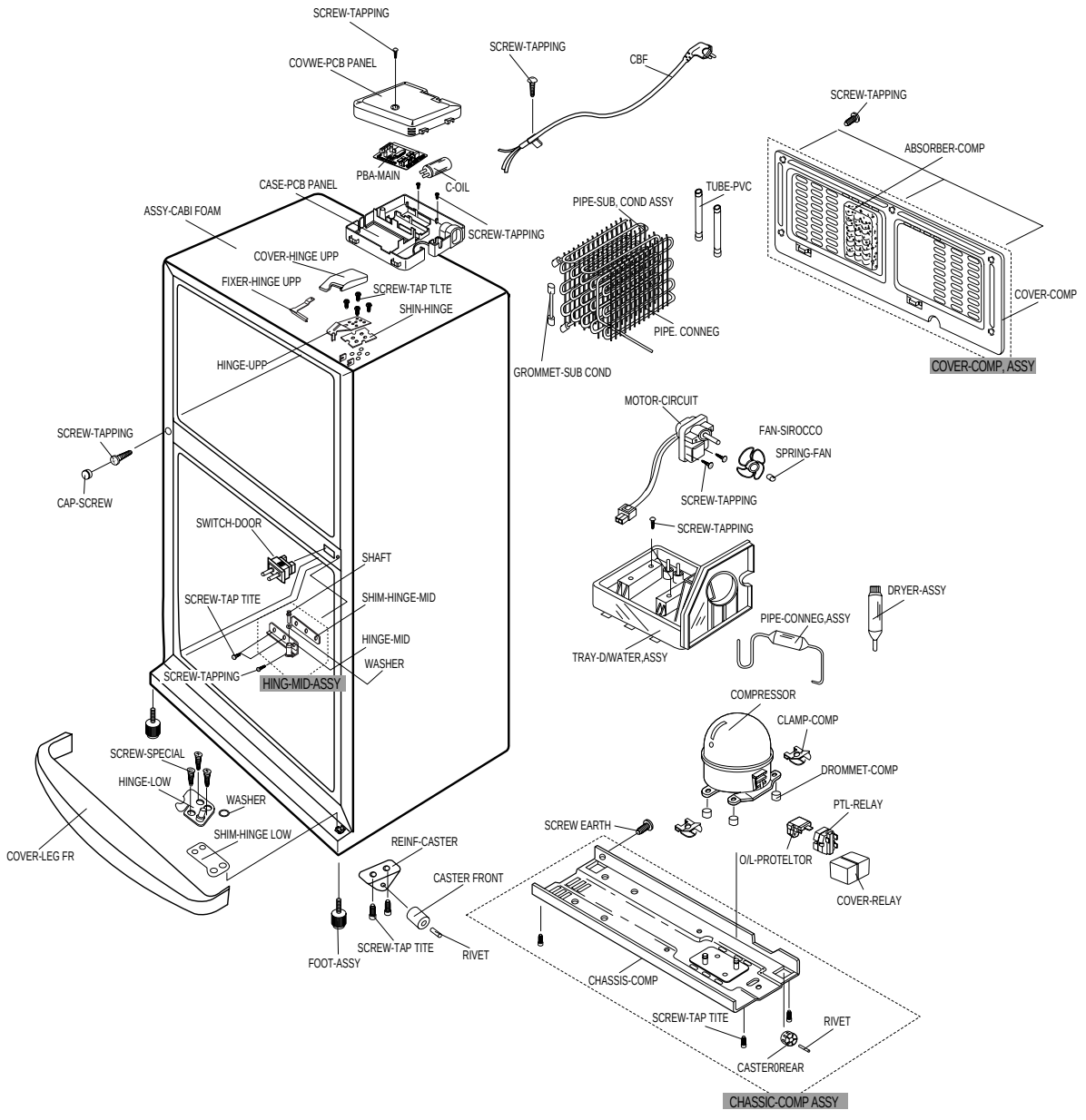
SCREW-TAPPING
COVWE-PCB PANEL
SCREW-TAPPING
CBF
SCREW-TAPPING
ABSORBER-COMP
PBA-MAIN
C-OIL
CASE-PCB PANEL
TUBE-PVC
PIPE-SUB, COND ASSY
ASSY-CABI FOAM
SCREW-TAPPING
COVER-HINGE UPP
FIXER-HINGE UPP
SCREW-TAP TLTE
SHIN-HINGE
PIPE. CONNEG
COVER-COMP
COVER-COMP, ASSY
HINGE-UPP
GROMMET-SUB COND
MOTOR-CIRCUIT
FAN-SIROCCO
SPRING-FAN
SCREW-TAPPING
CAP-SCREW
SCREW-TAPPING
SCREW-TAPPING
SWITCH-DOOR
SHAFT
SCREW-TAP TITE
SHIM-HINGE-MID
DRYER-ASSY
PIPE-CONNEG,ASSY
HINGE-MID
WASHER
TRAY-D/WATER,ASSY
SCREW-TAPPING
HING-MID-ASSY
COMPRESSOR
CLAMP-COMP
SCREW-SPECIAL
HINGE-LOW
DROMMET-COMP
WASHER
PTL-RELAY
SCREW EARTH
SHIM-HINGE LOW
COVER-LEG FR
REINF-CASTER
O/L-PROTELTOR
CASTER FRONT
COVER-RELAY
SCREW-TAP TITE
RIVET
FOOT-ASSY
CHASSIS-COMP
SCREW-TAP TITE
RIVET
CASTER0REAR
CHASSIC-COMP ASSY

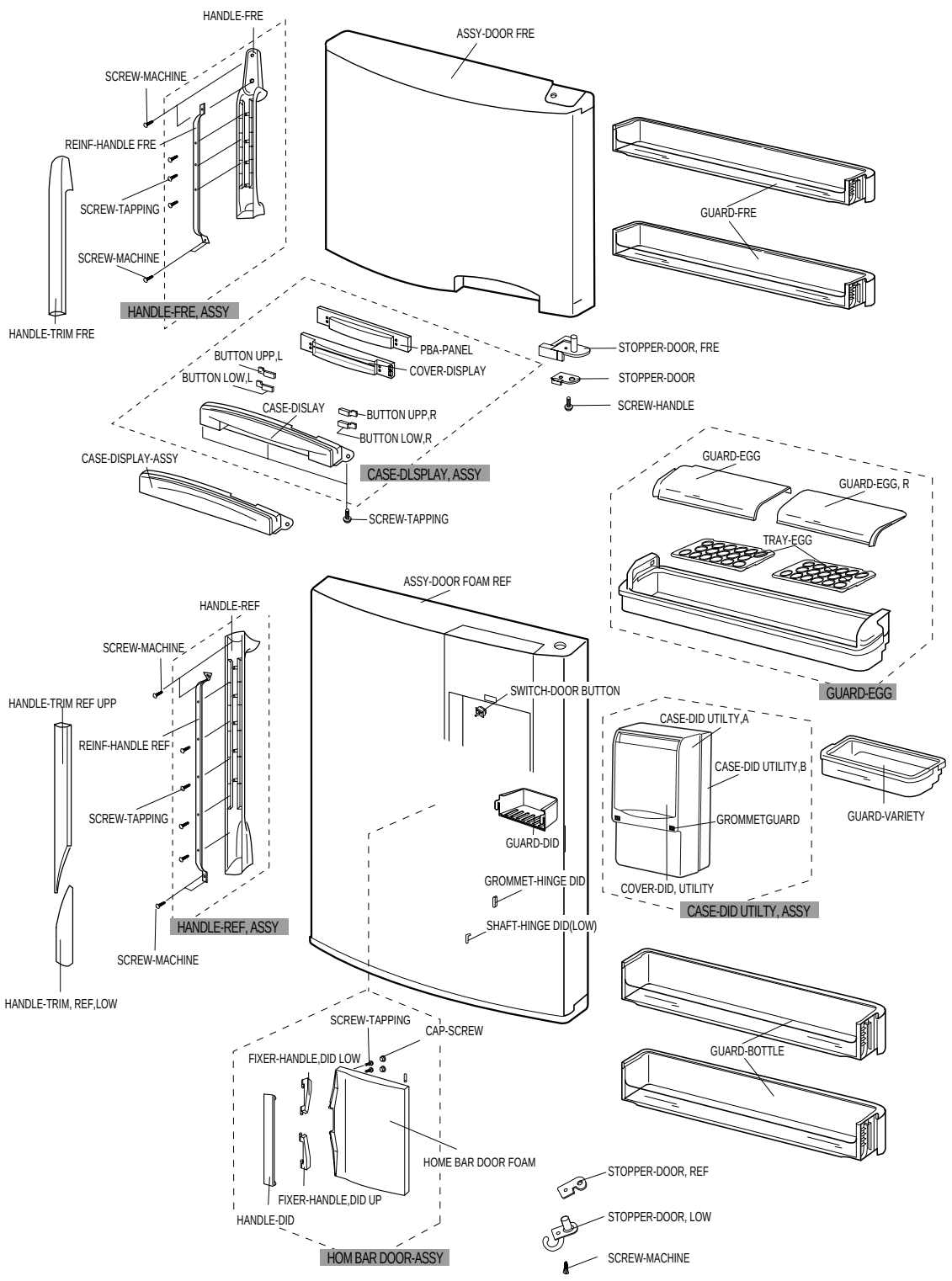
HANDLE-FRE
SCREW-MACHINE
REINF-HANDLE FRE
SCREW-TAPPING
SCREW-MACHINE
HANDLE-TRIM FRE
HANDLE-FRE, ASSY
ASSY-DOOR FRE
GUARD-FRE
PBA-PANEL
COVER-DISPLAY
BUTTON UPP,L
BUTTON LOW,L
CASE-DISLAY
BUTTON UPP,R
BUTTON LOW,R
CASE-DISPLAY-ASSY
CASE-DLSPLAY, ASSY
SCREW-TAPPING
STOPPER-DOOR, FRE
STOPPER-DOOR
SCREW-HANDLE
GUARD-EGG
GUARD-EGG, R
TRAY-EGG
GUARD-EGG
ASSY-DOOR FOAM REF
HANDLE-REF
SCREW-MACHINE
HANDLE-TRIM REF UPP
REINF-HANDLE REF
SCREW-TAPPING
HANDLE-REF, ASSY
SCREW-MACHINE
HANDLE-TRIM, REF,LOW
SWITCH-DOOR BUTTON
GUARD-DID
GROMMET-HINGE DID
SHAFT-HINGE DID(LOW)
CASE-DID UTILTY,A
CASE-DID UTILITY,B
GROMMETGUARD
COVER-DID, UTILITY
CASE-DID UTILTY, ASSY
GUARD-VARIETY
GUARD-BOTTLE
SCREW-TAPPING
CAP-SCREW
FIXER-HANDLE,DID LOW
HOME BAR DOOR FOAM
FIXER-HANDLE,DID UP
HANDLE-DID
HOM BAR DOOR-ASSY
STOPPER-DOOR, REF
STOPPER-DOOR, LOW
SCREW-MACHINE