KD -212F

Exploded View

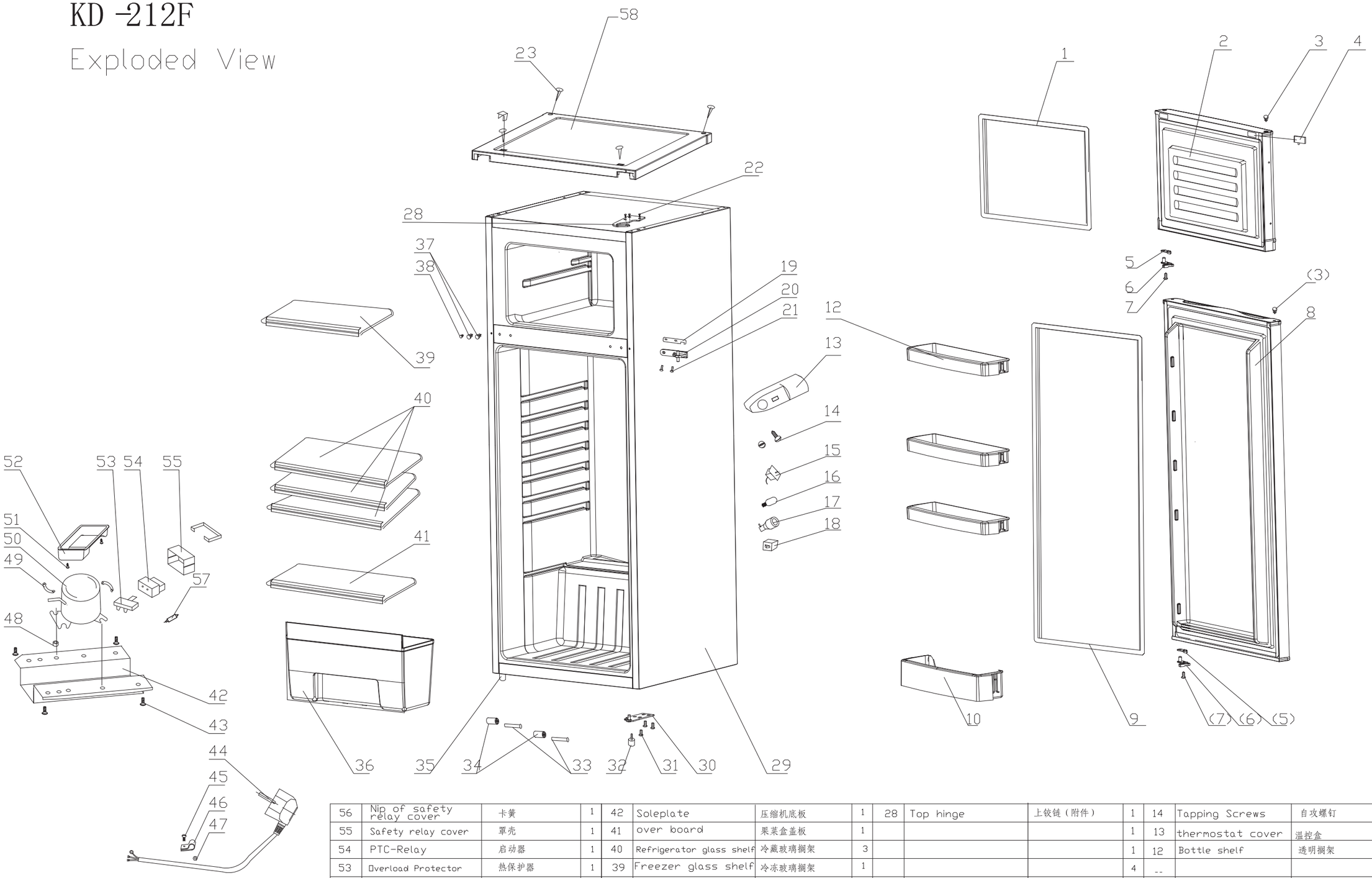

Serial Number	Item		Quantity	Serial Number	Item		Quantity	Serial Number	Item		Quantity	Serial Number	Item		Quantity	Serial Number	Item		Quantity
				56	Nip of safety relay cover	卡黄	1	42	Soleplate	压缩机底板	1	28	Top hinge	上铰链（附件）	1	14	Tapping Screws	自攻螺钉	2
				55	Safety relay cover	罩壳	1	41	over board	果菜盒盖板	1				1	13	thermostat cover	温控盒	1
				54	PTC-Relay	启动器	1	40	Refrigerator glass shelf	冷藏玻璃搁架	3				1	12	Bottle shelf	透明搁架	3
				53	Overload Protector	热保护器	1	39	Freezer glass shelf	冷冻玻璃搁架	1				4	--			1
				52	Drip tray	接水盘	1	38	Box cover	箱盖帽 I	1				2	10	Bottle shelf	透明瓶搁架	1
				51	Screws	自攻螺钉	2	37	Box cover	箱盖帽 II	2	23	nail	螺钉	3	9	Refrigerator door gasket	冷藏门封部件	1
				50	Compressor	压缩机	1	36	Vagetable Case	果菜盒	1	22	tapping screws	六角头螺钉	2	8	Refrigerator door	冷藏门发泡部件	1
				49	Fastness nip	压缩机底板固定板	2	35	adjustable foot	可调底脚	1	21	tapping screws	六角头螺钉	2	7	Tapping Screws	自攻螺钉	2
				48	Latex mat	橡胶垫	4	34	wheel	轮子	2	20	Mid hinge	中铰链部件	1	6	escutcheon	锁紧块	2
61				47	Nut	线夹固定螺母	1	33	axes	轴	2	19	Washer of mid hinge	中铰链垫片	1	5	escutcheon	限位块	2
60				46	Clamp	线夹	1	32	foot	底脚	1	18	lamp switch	灯开关	1	4	Door clip	门盖卡子	1
59				45	Screws	线夹固定螺钉	1	31	tapping screws	六角头螺钉	3	17	lamp holder	灯座	1	3	Door cover	门盖孔帽	2
58	Top	顶盖	1	44	Power cable	电源线	1	30	bottom hinge	下铰链部件	1	16	lamp	灯泡	1	2	Freezer door	冷冻门发泡部件	1
57	Filter dry	干燥过滤器	1	43	tapping screws	压缩机底板螺钉	4	29	Box Parts	箱体部件	1	15	thermostat	温控器	1	1	Freezer door gasket	冷冻门封部件	1