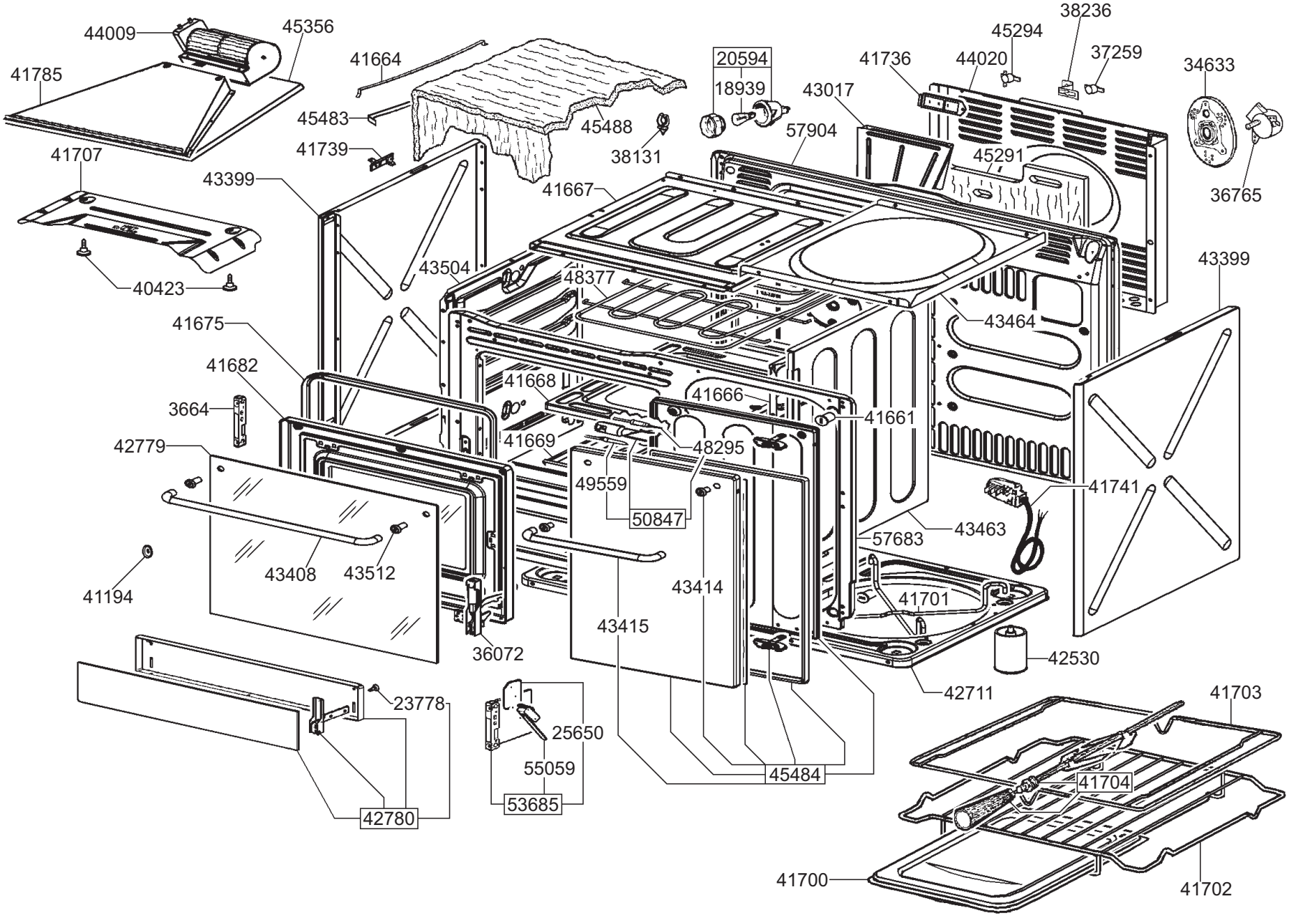
44009
45356
41785
41664
45483
41739
45488
38131
20594
18939
57904
41736
44020
45294
38236
37259
43017
34633
36765
45291
41707
43399
41667
40423
43504
48377
43399
43464
41675
41682
41668
41666
41661
3664
42779
41669
48295
49559
50847
41741
43463
57683
43408
43512
41194
43414
41701
43415
36072
42530
42711
23778
25650
55059
45484
41703
41704
42780
53685
41700
41702

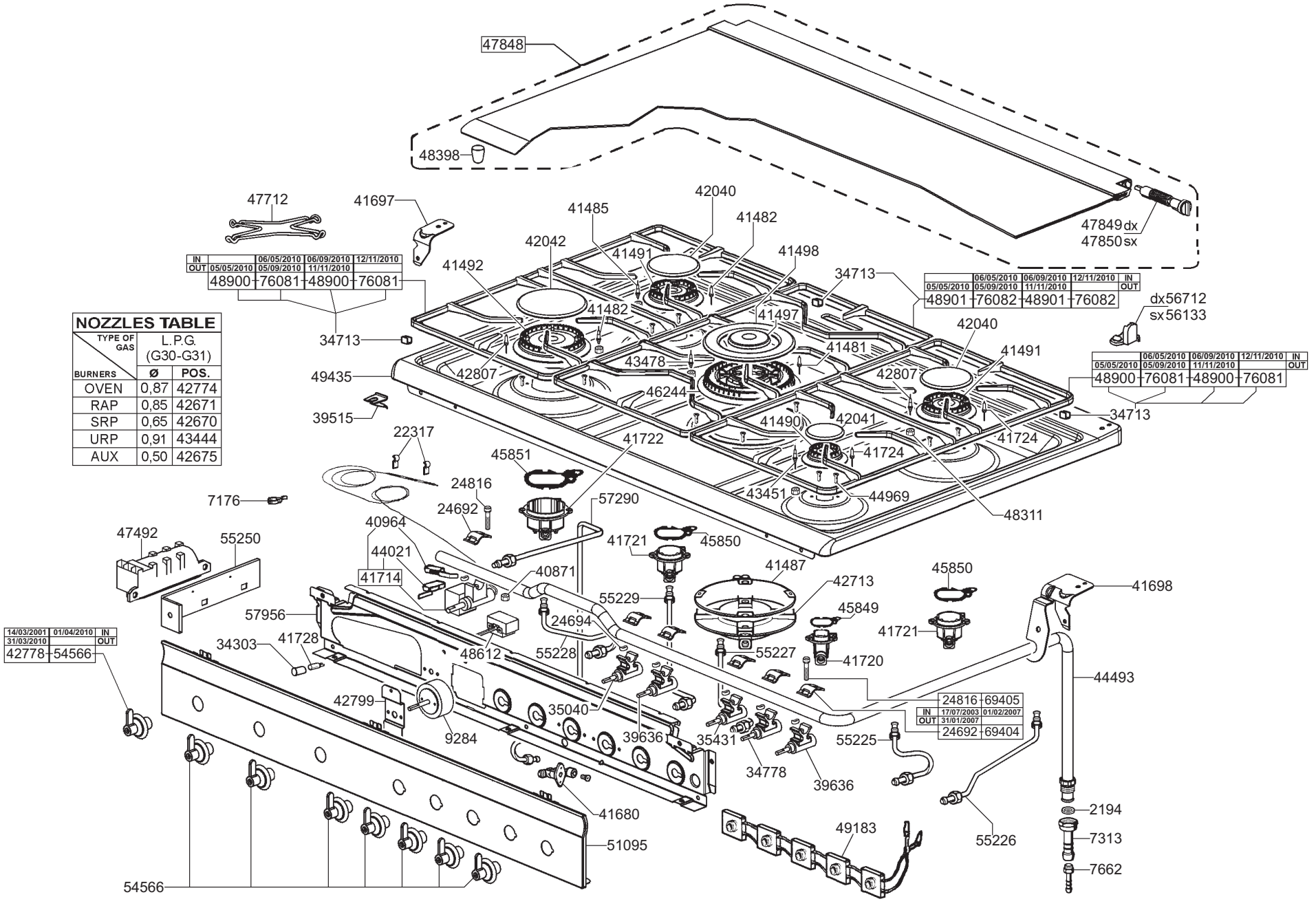


| IN | | 06/05/2010 | 06/09/2010 | 12/11/2010 |
|---|---|---|---|---|
| OUT | 05/05/2010 | 05/09/2010 | 11/11/2010 | |
| | 48900 | 76081 | 48900 | 76081 |

| | 06/05/2010 | 06/09/2010 | 12/11/2010 | IN |
|---|---|---|---|---|
| 05/05/2010 | 05/09/2010 | 11/11/2010 | | OUT |
| 48901 | 76082 | 48901 | 76082 | |

dx 56712
sx 56133

| | 06/05/2010 | 06/09/2010 | 12/11/2010 | IN |
|---|---|---|---|---|
| 05/05/2010 | 05/09/2010 | 11/11/2010 | | OUT |
| 48900 | 76081 | 48900 | 76081 | |

| 14/03/2001 | 01/04/2010 | IN |
|---|---|---|
| 31/03/2010 | | OUT |
| 42778 | 54566 | |

| | | |
|---|---|---|
| | 24816 | 69405 |
| IN | 17/07/2003 | 01/02/2007 |
| OUT | 31/01/2007 | |
| | 24692 | 69404 |

## NOZZLES TABLE

| TYPE OF GAS / BURNERS | L.P.G. (G30-G31) | |
|---|---|---|
| | Ø | POS. |
| OVEN | 0,87 | 42774 |
| RAP | 0,85 | 42671 |
| SRP | 0,65 | 42670 |
| URP | 0,91 | 43444 |
| AUX | 0,50 | 42675 |