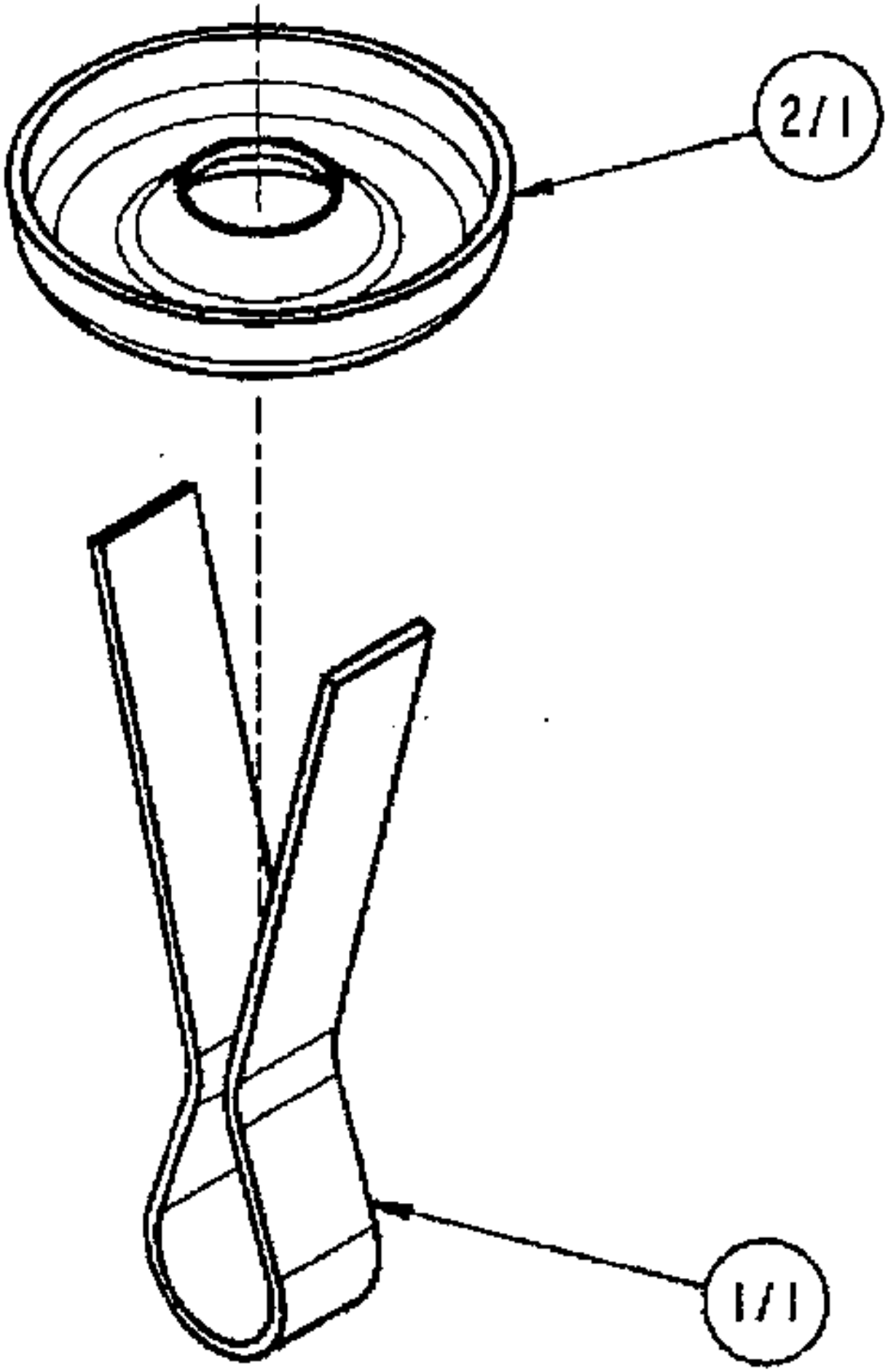
2/1
1/1

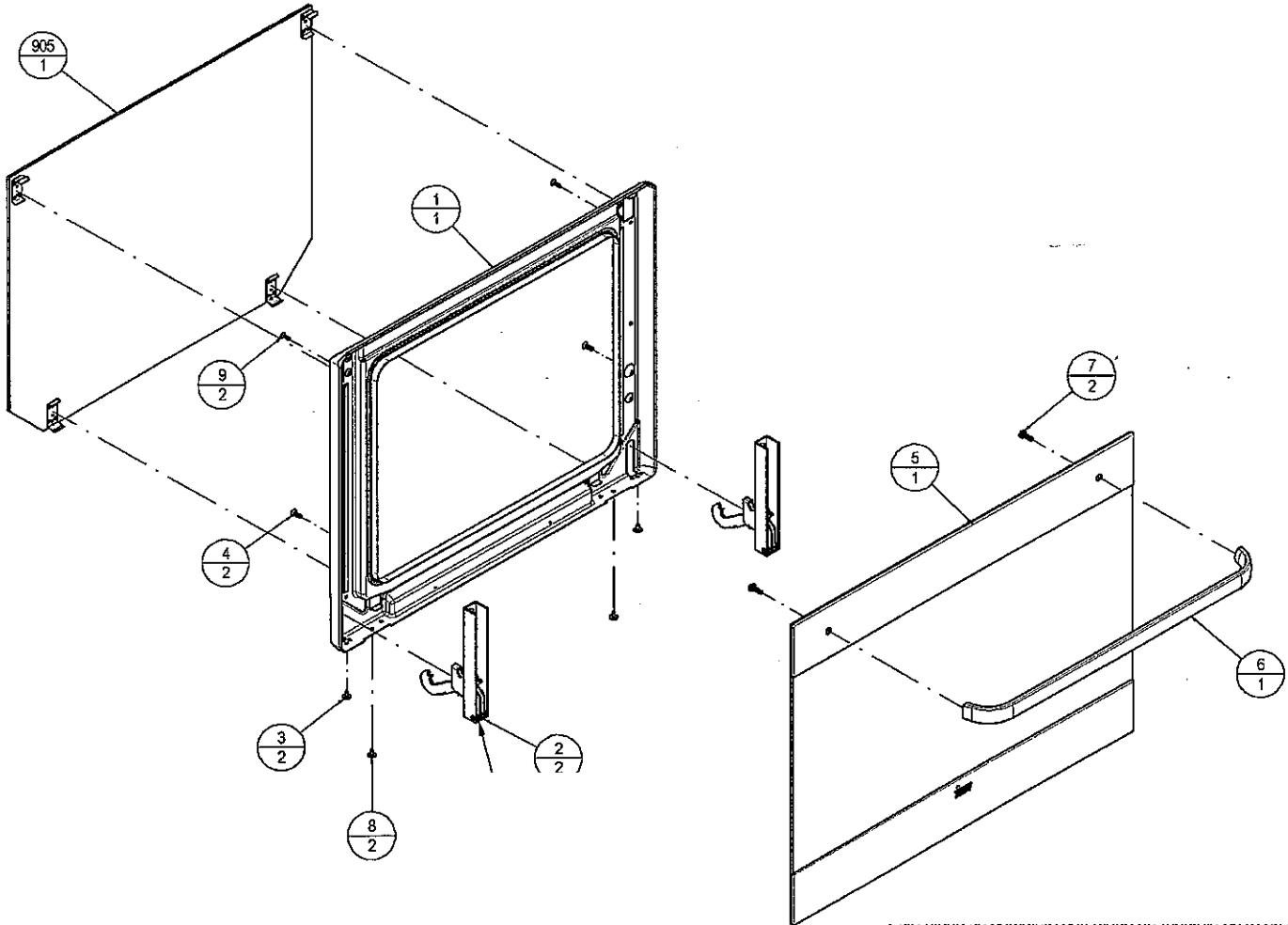
905
1
1
1
9
2
4
2
3
2
8
2
2
2
7
2
5
1
6
1

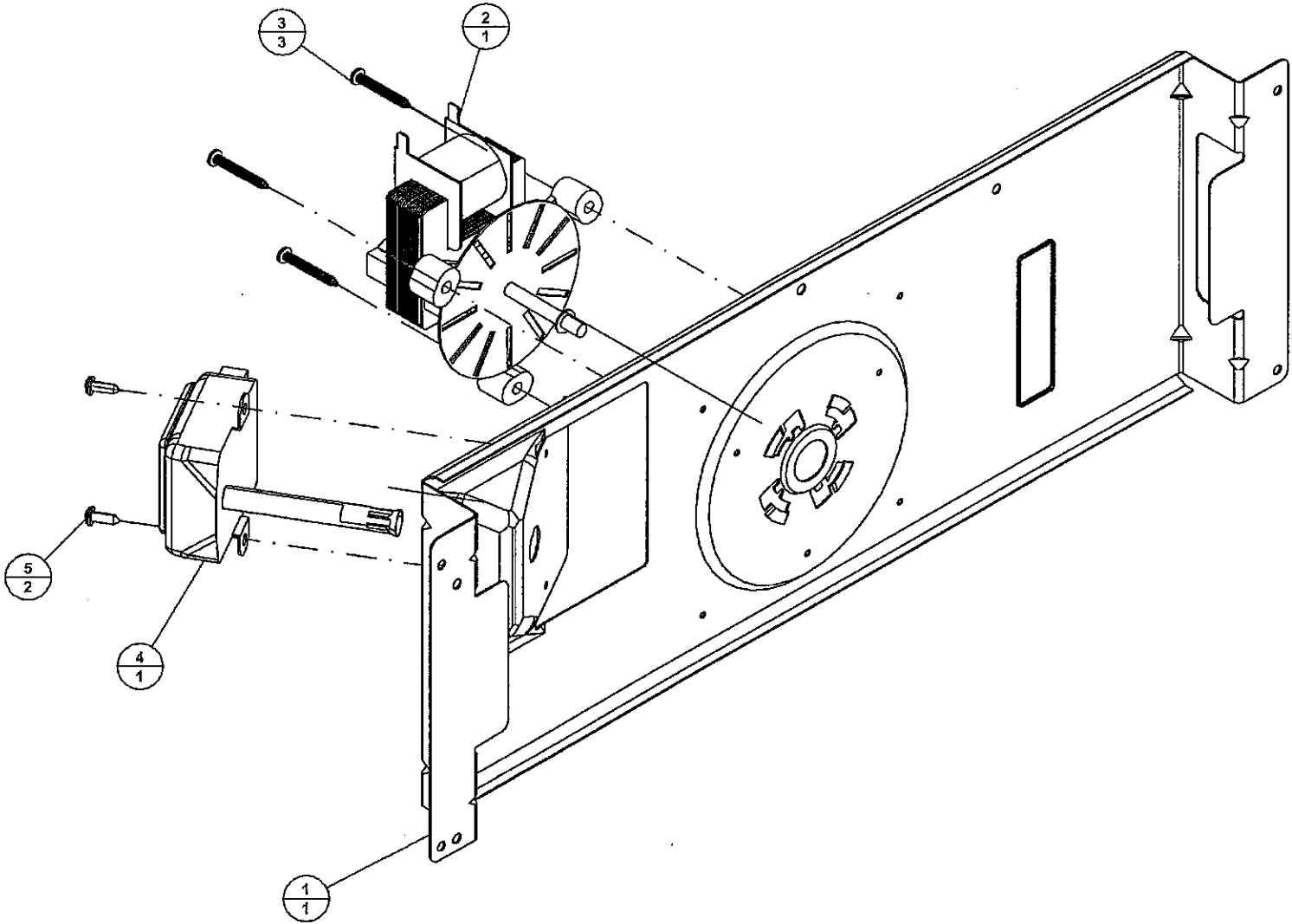
3
3
2
1
5
2
4
1
1
1

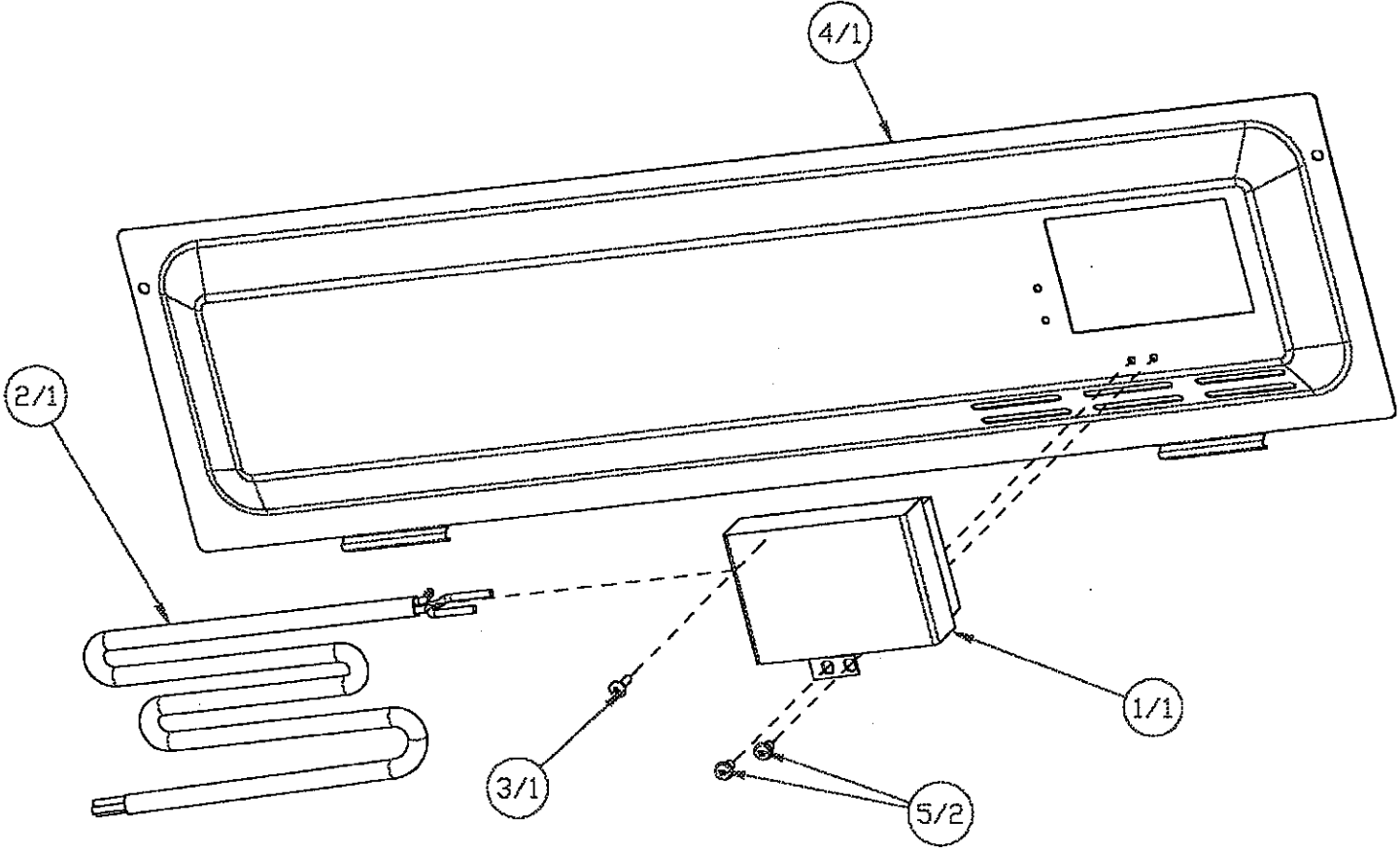
4/1
2/1
1/1
3/1
5/2

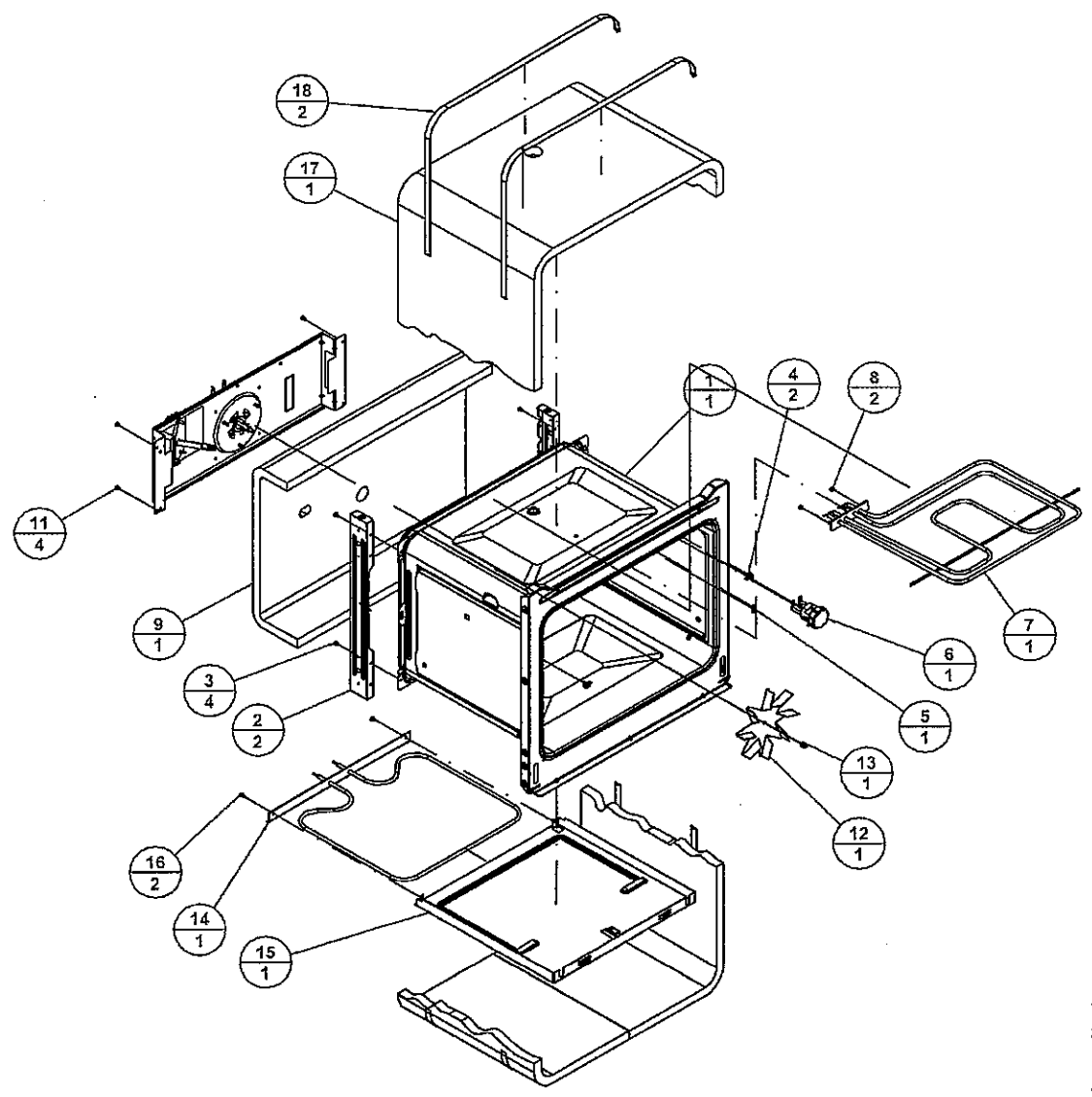
18
2
17
1
1
1
4
2
8
2
11
4
9
1
3
4
2
2
6
1
7
1
5
1
13
1
12
1
16
2
14
1
15
1

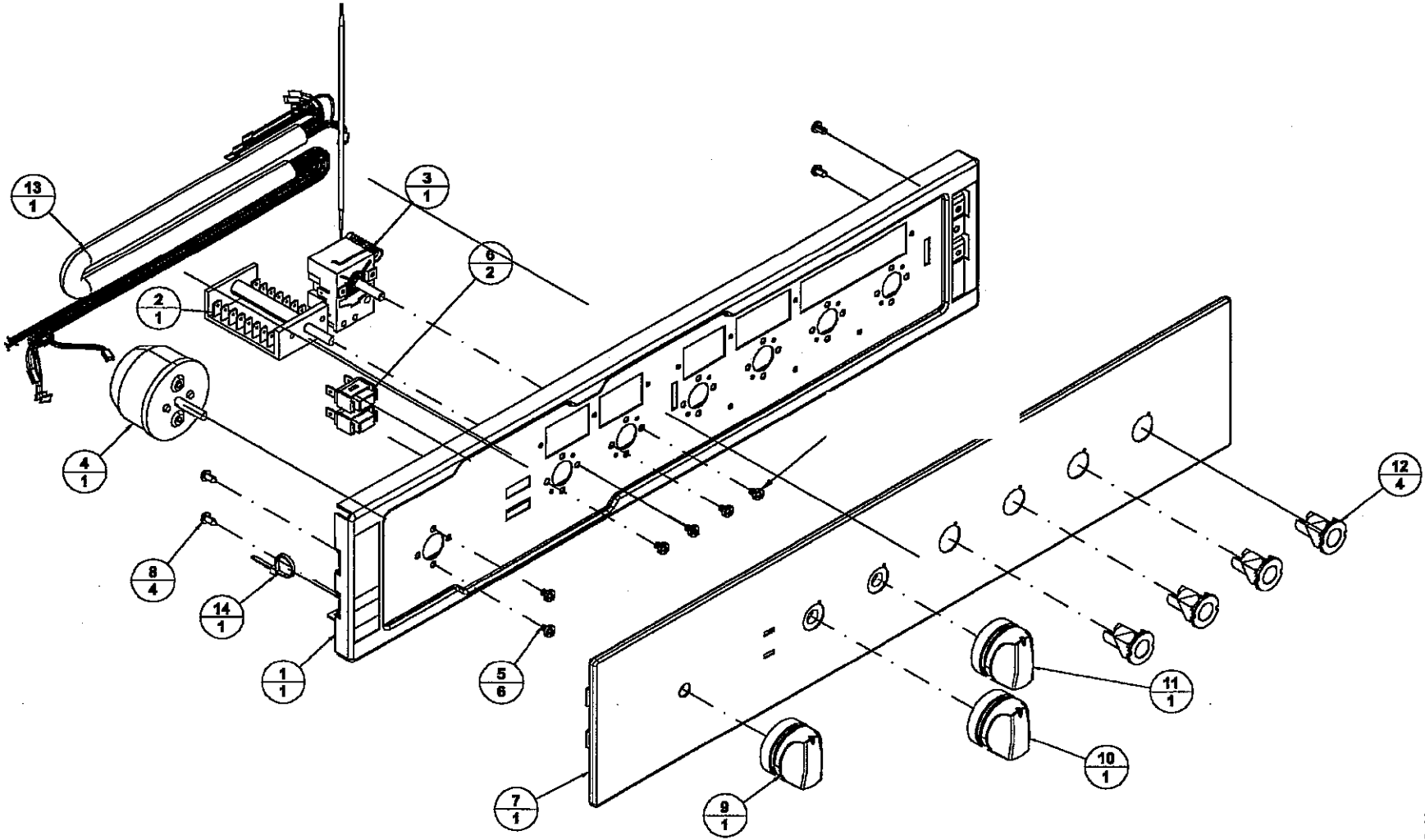
13/1
3/1
6/2
2/1
4/1
8/4
14/1
1/1
5/6
7/1
9/1
10/1
11/1
12/4

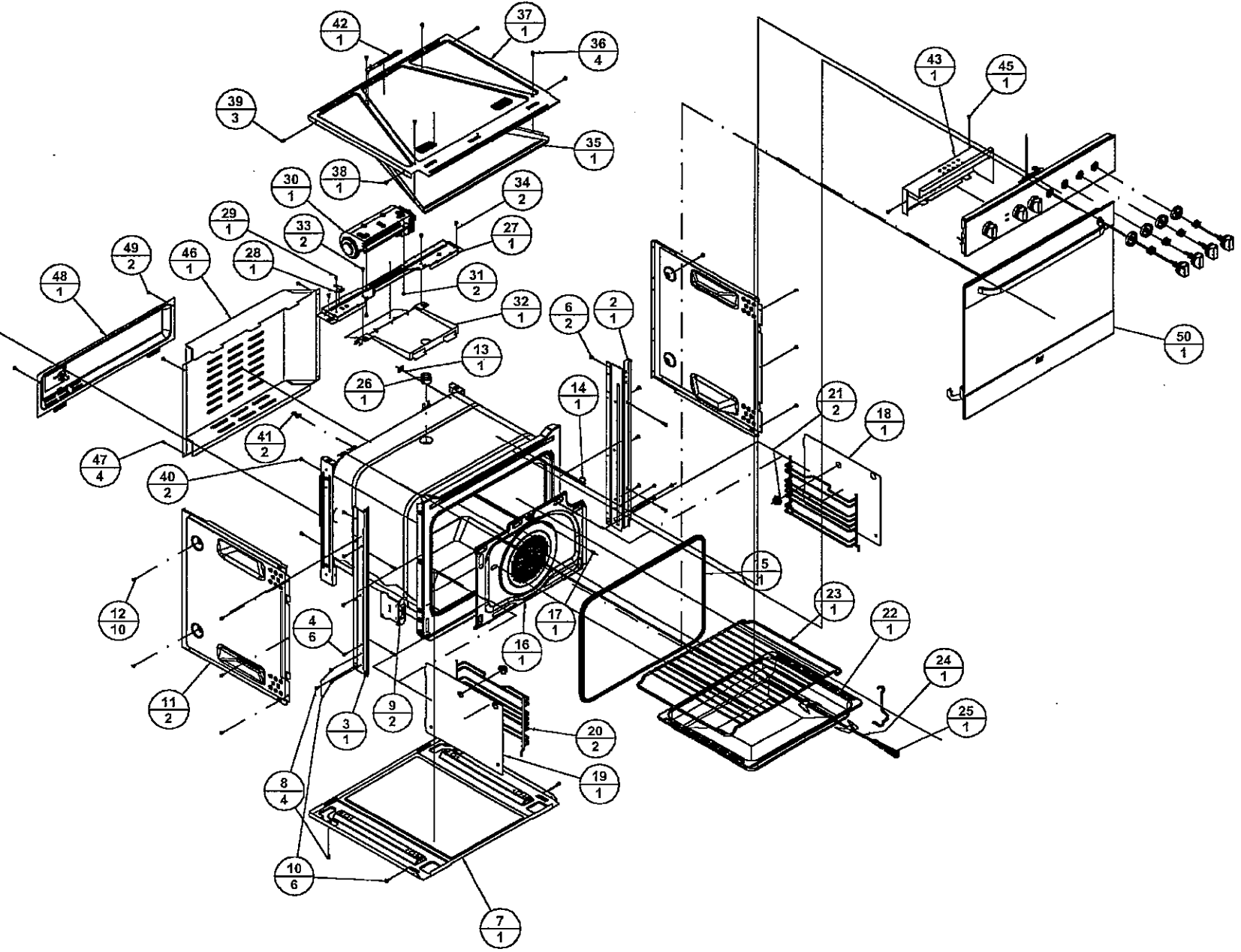
42 1
37 1
36 4
39 3
35 1
38 1
30 1
34 2
29 1
33 2
27 1
49 2
46 1
28 1
48 1
31 2
32 1
6 2
2 1
13 1
26 1
14 1
41 2
47 4
40 2
21 2
18 1
43 1
45 1
50 1
5 1
12 10
4 6
17 1
23 1
22 1
16 1
24 1
11 2
9 2
3 1
20 2
25 1
8 4
19 1
10 6
7 1