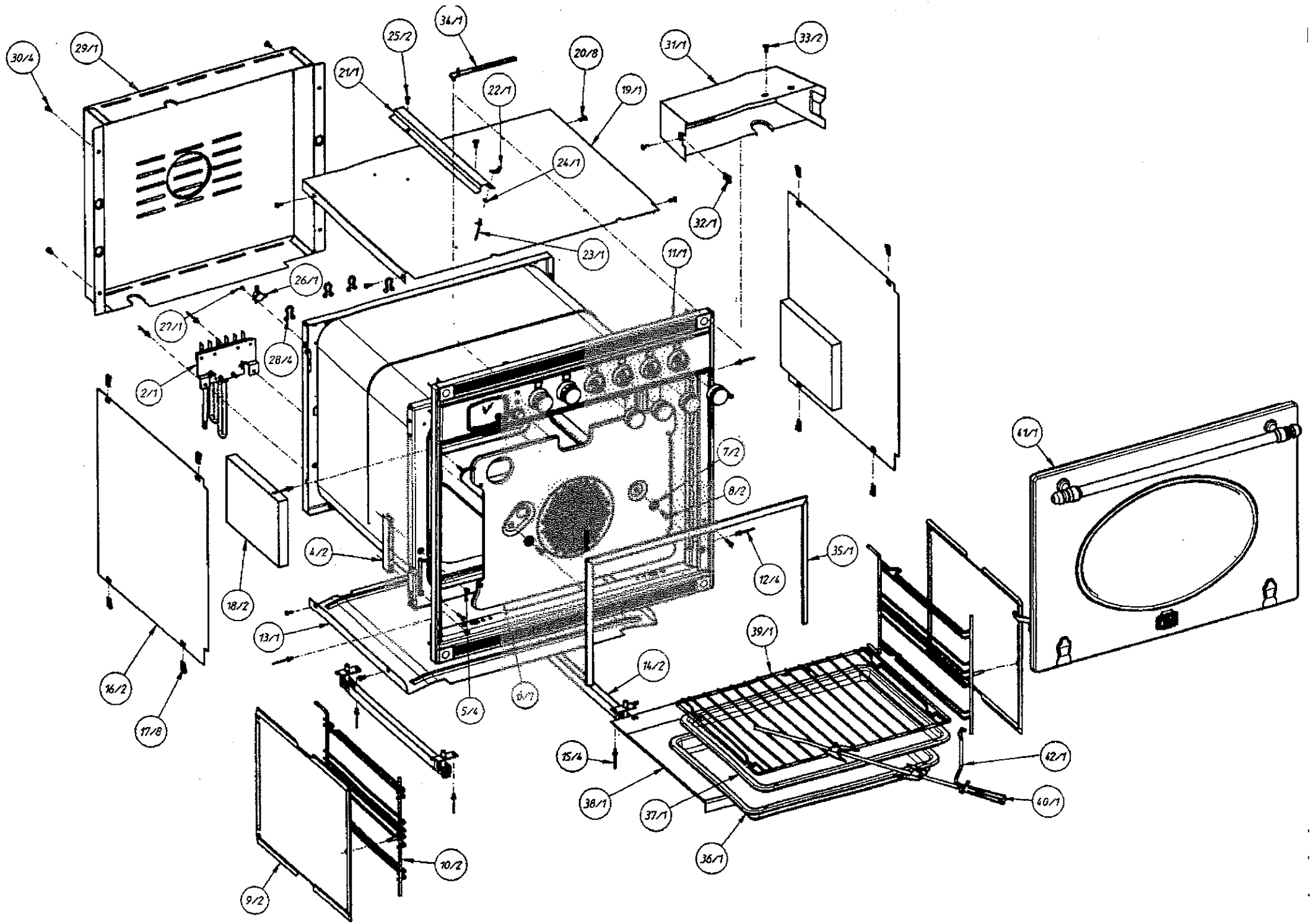
30/4
29/1
25/2
34/1
21/1
22/1
20/8
19/1
31/1
33/2
24/1
32/1
23/1
11/1
26/1
27/1
28/4
2/1
7/2
8/2
61/1
4/2
35/1
12/4
18/2
13/1
39/1
14/2
16/2
17/8
6/1
5/4
15/4
42/1
38/1
37/1
40/1
36/1
10/2
9/2

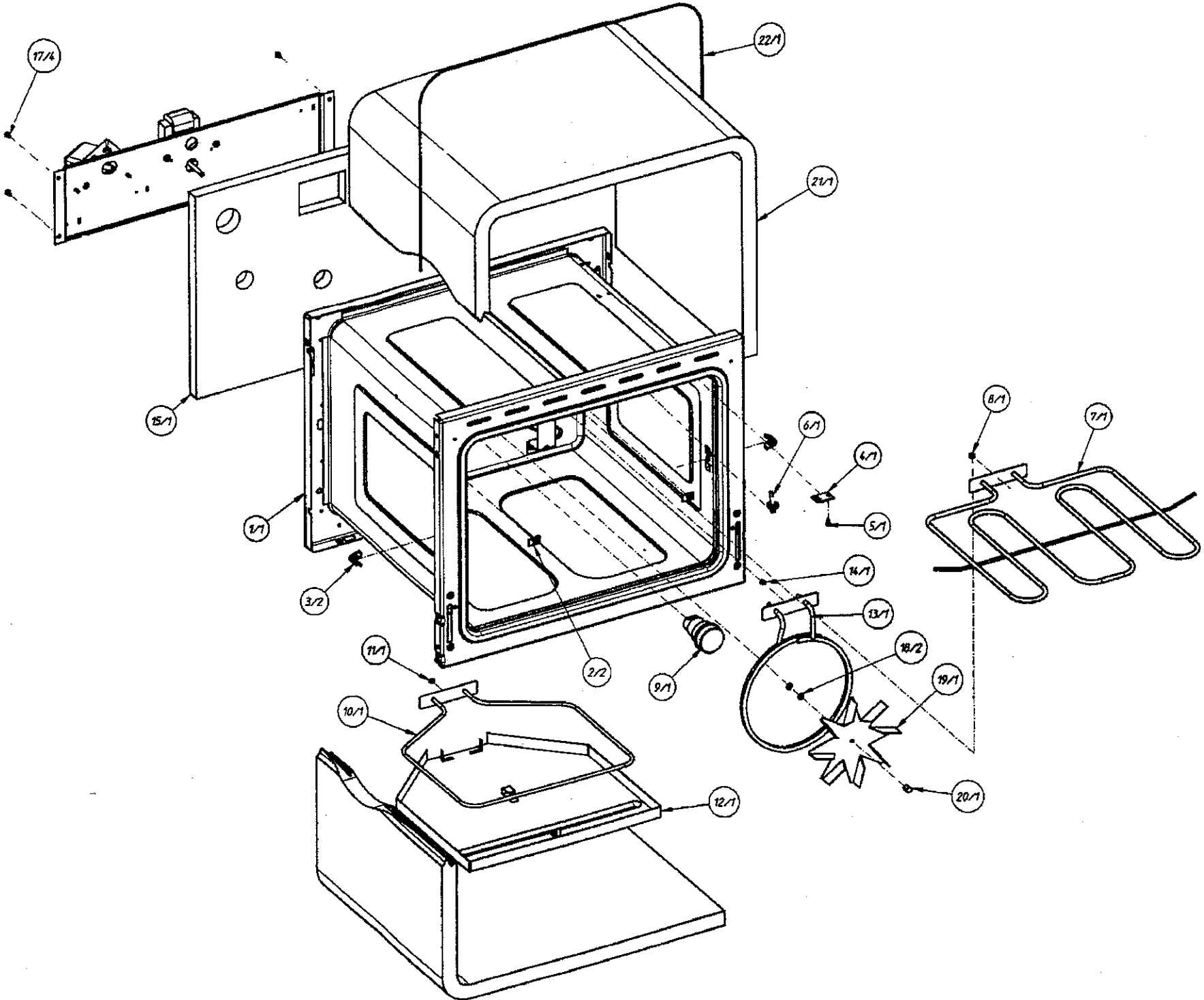
17/4
22/1
21/1
15/1
1/1
3/2
2/2
6/1
4/1
5/1
8/1
7/1
14/1
13/1
18/2
19/1
20/1
9/1
11/1
10/1
12/1

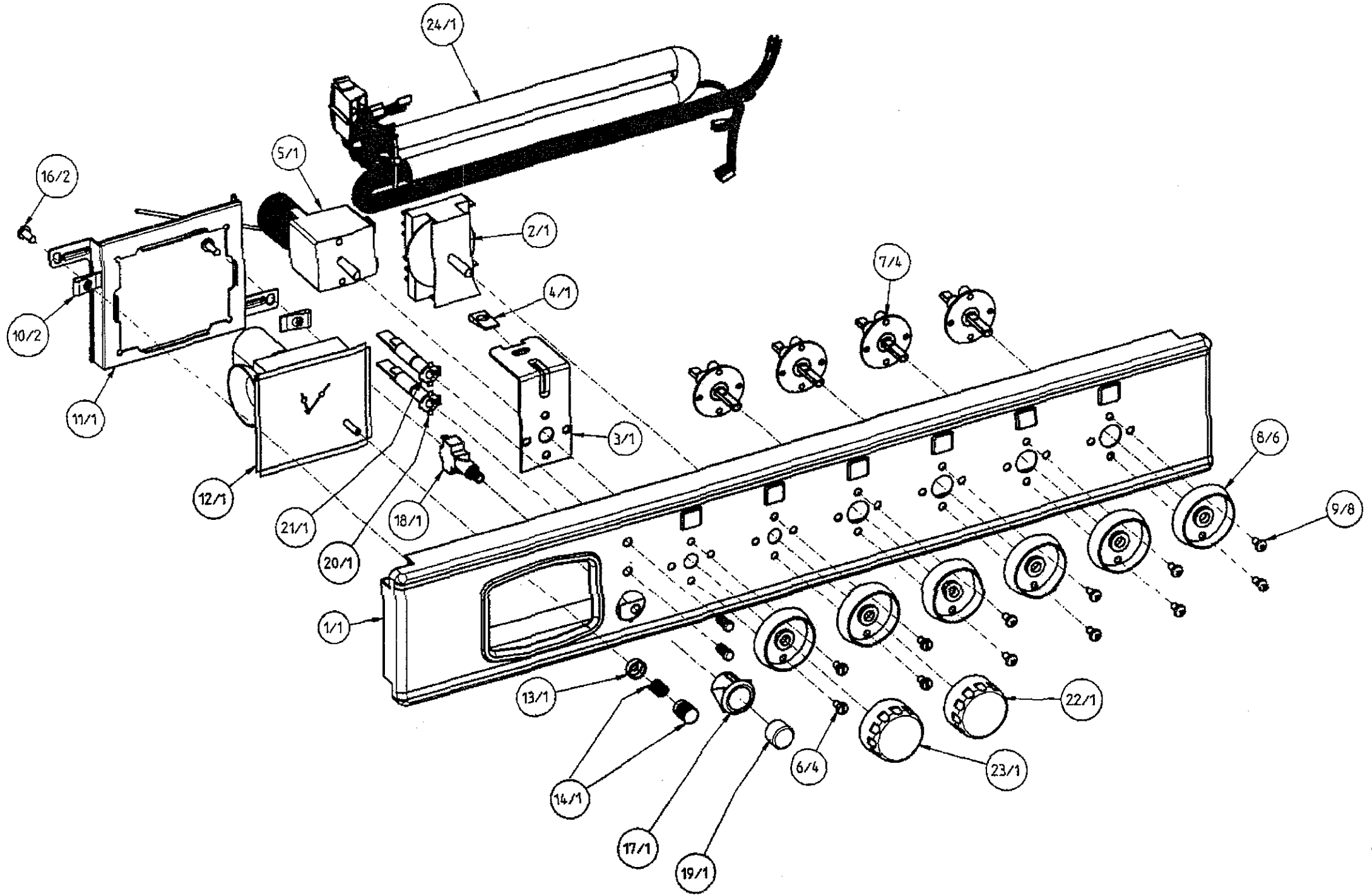
24/1
5/1
16/2
2/1
7/4
4/1
10/2
11/1
3/1
8/6
12/1
21/1
18/1
9/8
20/1
1/1
13/1
22/1
6/4
23/1
14/1
17/1
19/1

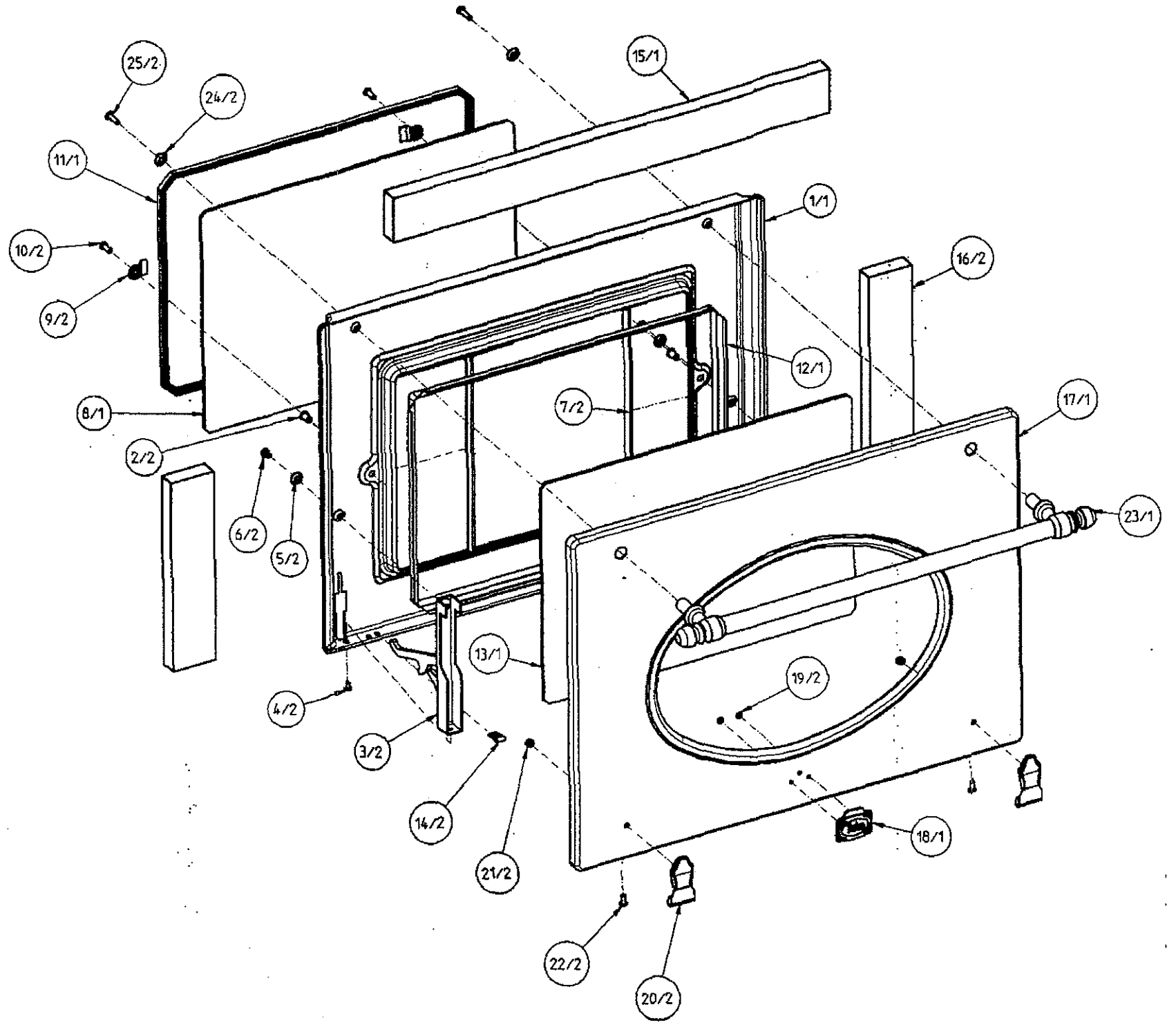
25/2
24/2
15/1
11/1
1/1
10/2
16/2
9/2
12/1
8/1
7/2
17/1
2/2
6/2
5/2
23/1
13/1
19/2
4/2
3/2
14/2
18/1
21/2
22/2
20/2

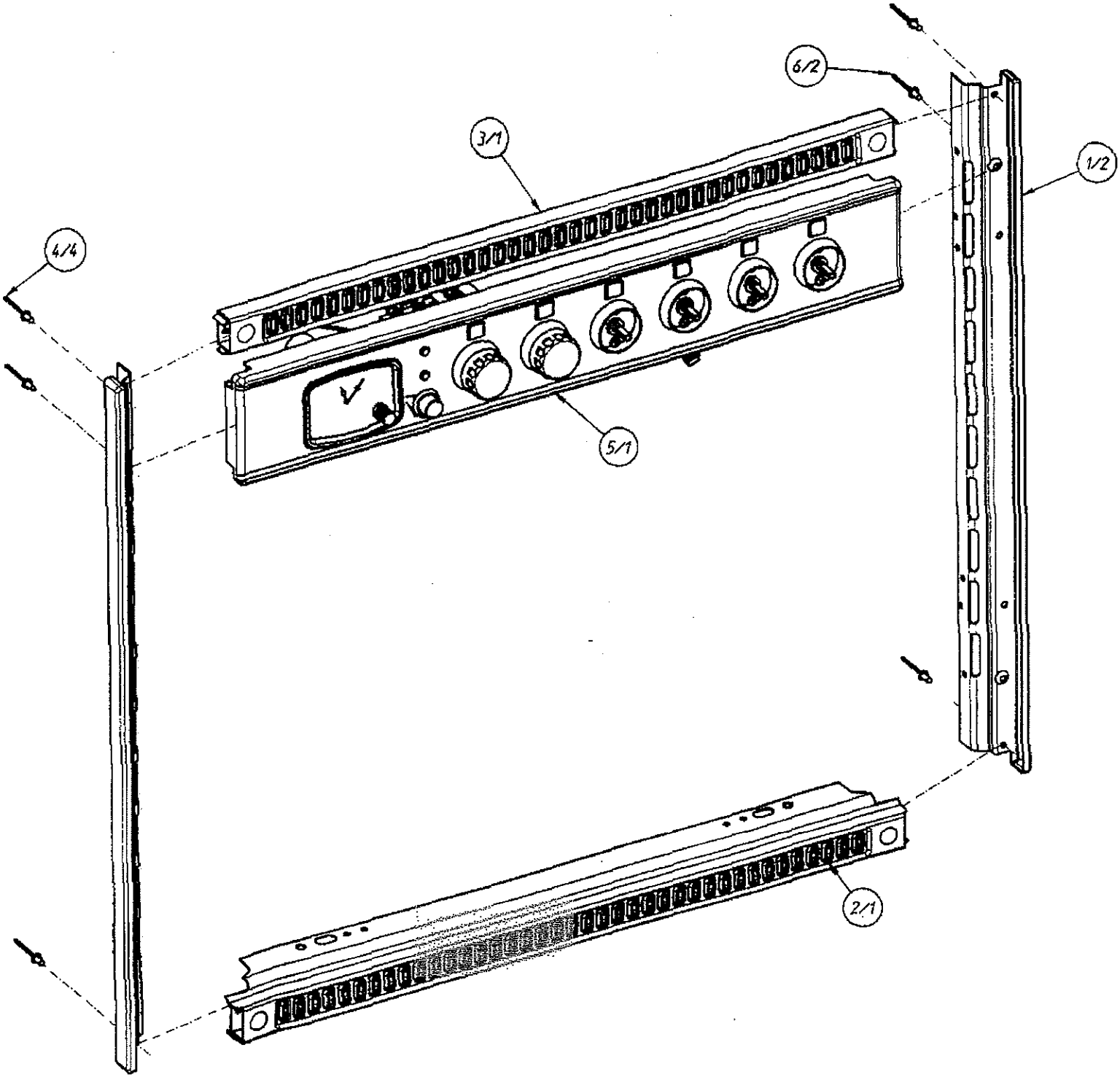
6/2
3/1
1/2
4/4
5/1
2/1

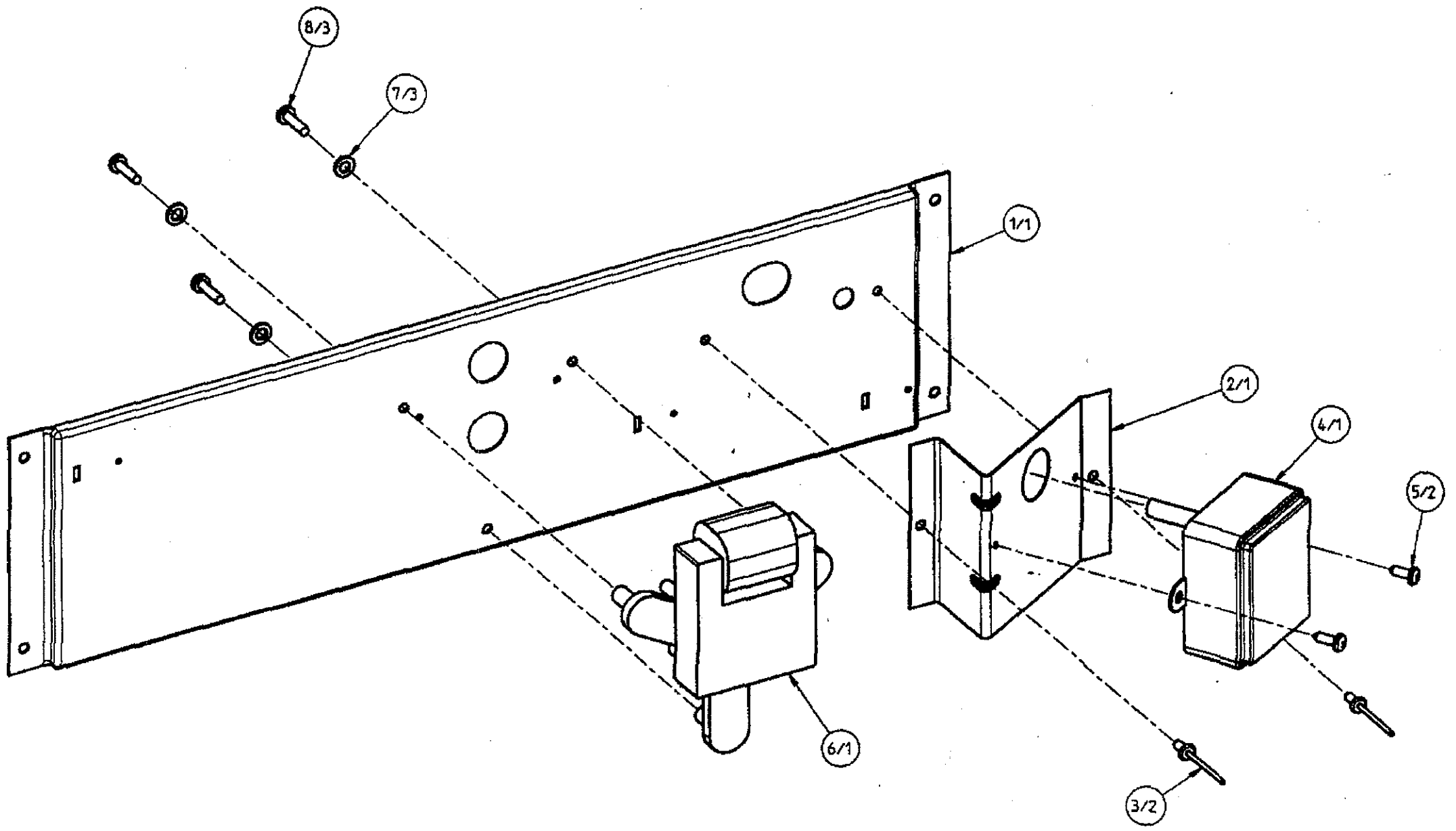
8/3
7/3
1/1
2/1
4/1
5/2
6/1
3/2

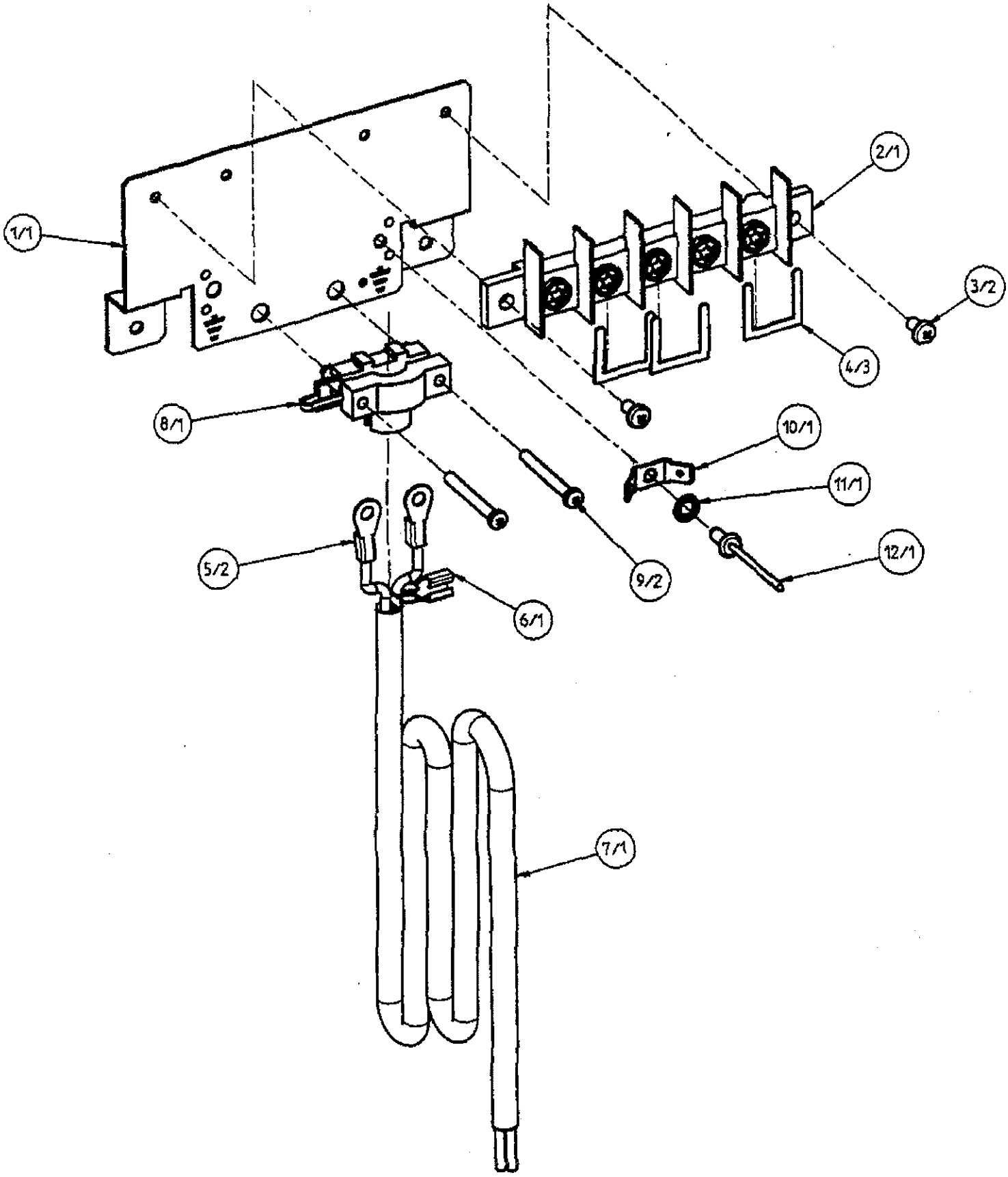
1/1
2/1
3/2
4/3
5/2
6/1
7/1
8/1
9/2
10/1
11/1
12/1