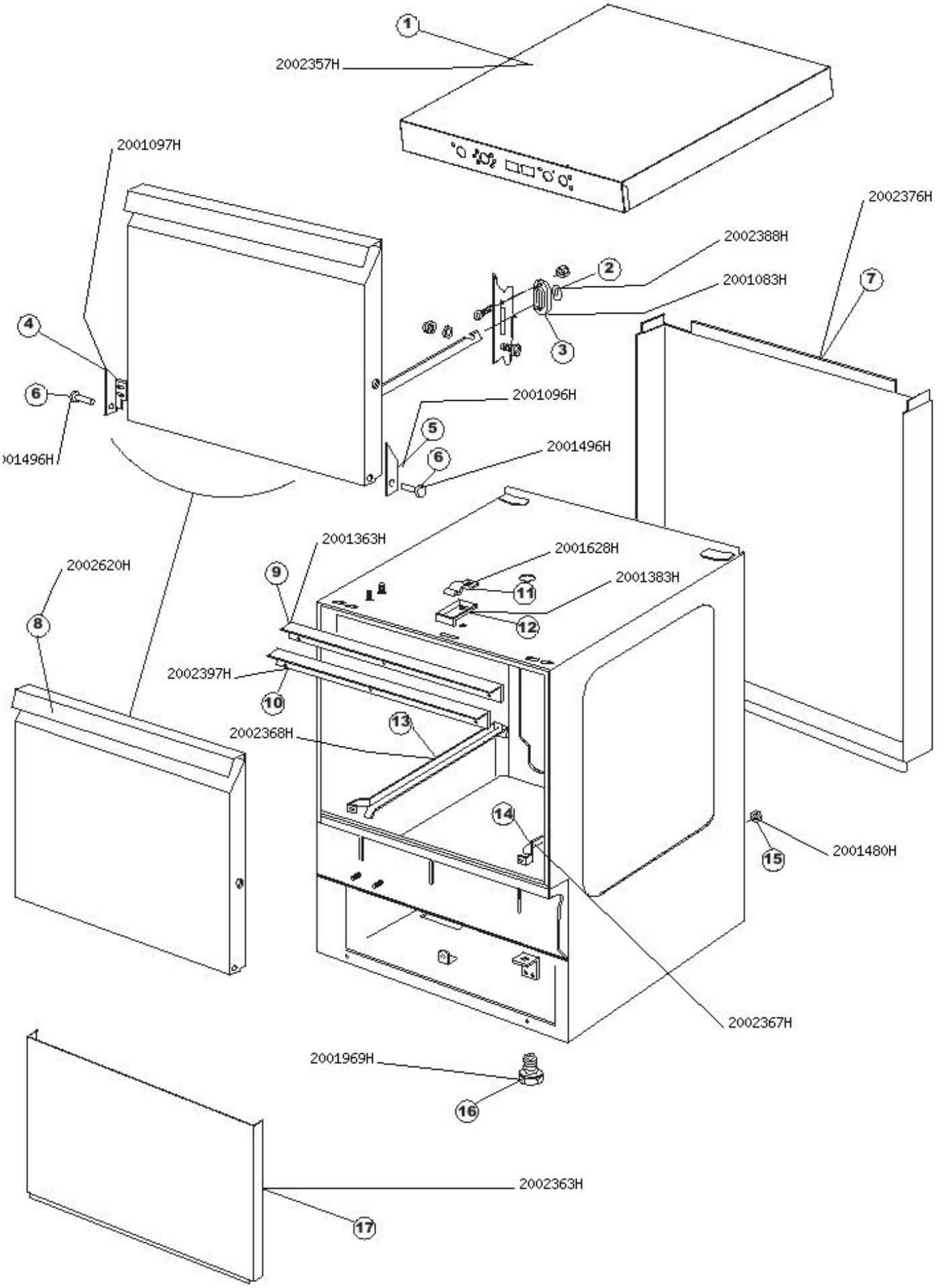
1
2002357H
2001097H
2002376H
2002388H
2
2001083H
7
4
3
6
2001096H
5
001496H
6
2001496H
2001363H
2001628H
2002620H
9
11
2001383H
8
12
2002397H
10
13
2002368H
14
15
2001480H
2002367H
2001969H
16
2002363H
17

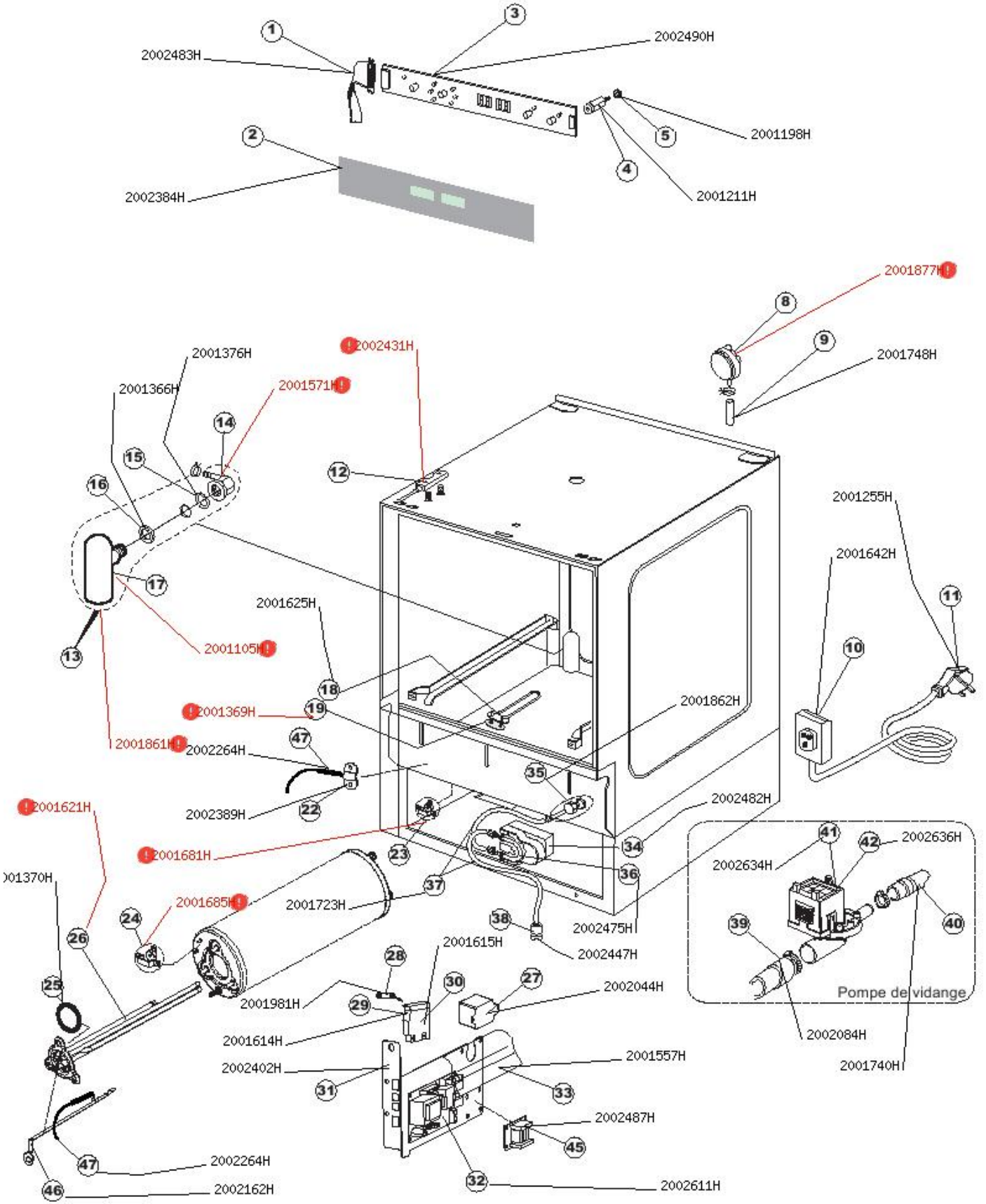
2002483H
2002490H
2001198H
2002384H
2001211H
2001877H
2001748H
2002431H
2001376H
2001366H
2001571H
2001255H
2001642H
2001625H
2001105H
2001862H
2001369H
2001861H
2002264H
2002389H
2002482H
2001621H
2001681H
2002636H
2002634H
2001370H
2001685H
2001723H
2002475H
2002447H
2001615H
2002044H
2001981H
2001614H
2002084H
2001557H
2002402H
2002487H
2001740H
2002264H
2002162H
2002611H
Pompe de vidange

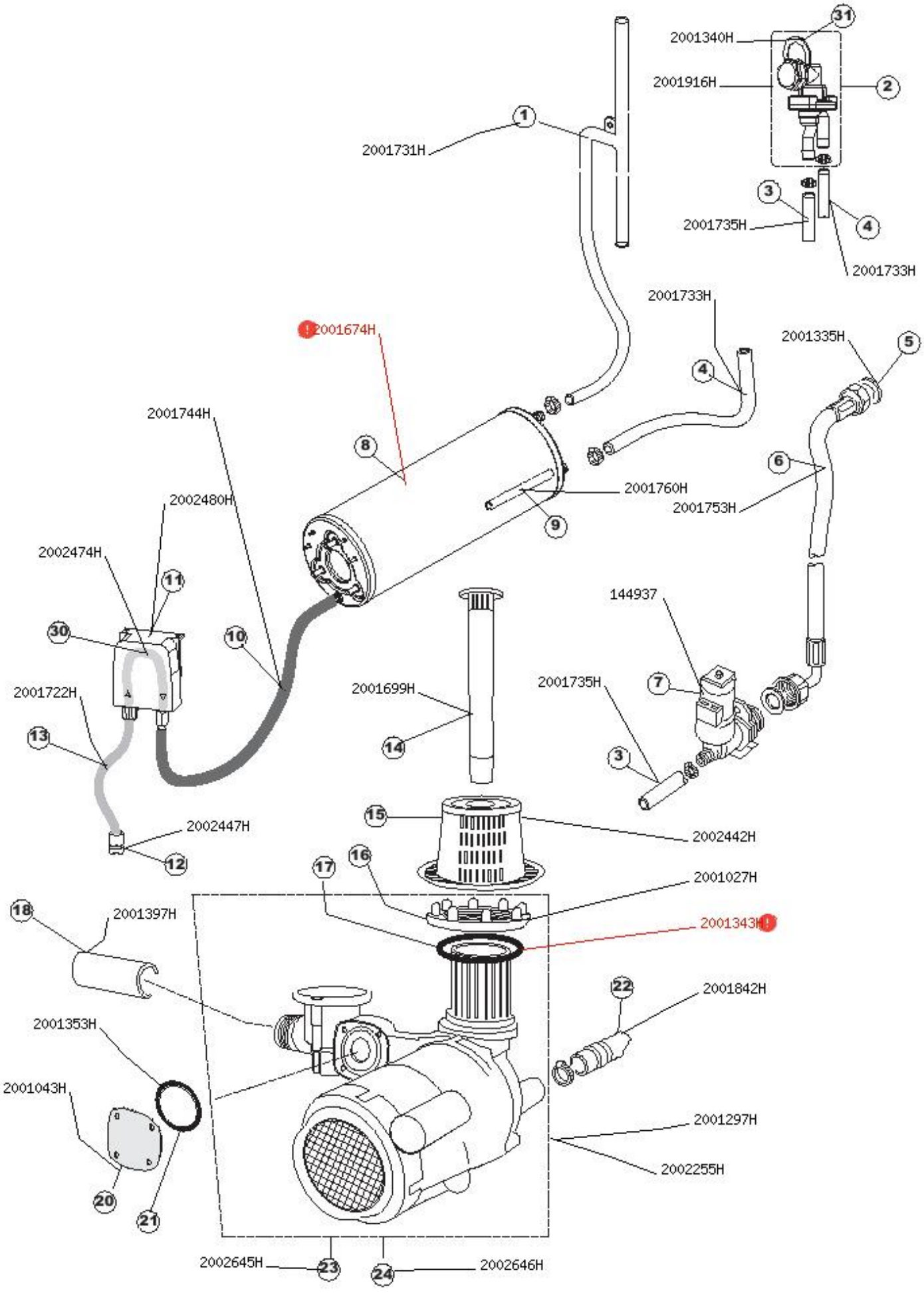
31
2001340H
2001916H
2
1
2001731H
3
4
2001735H
2001733H
2001733H
2001674H
2001335H
5
4
2001744H
8
6
2001760H
2001753H
2002480H
9
2002474H
11
144937
30
10
2001722H
2001699H
2001735H
7
13
14
3
15
2002442H
2002447H
12
17
16
2001027H
18
2001397H
2001343H
22
2001842H
2001353H
2001043H
2001297H
2002255H
20
21
2002645H
23
24
2002646H

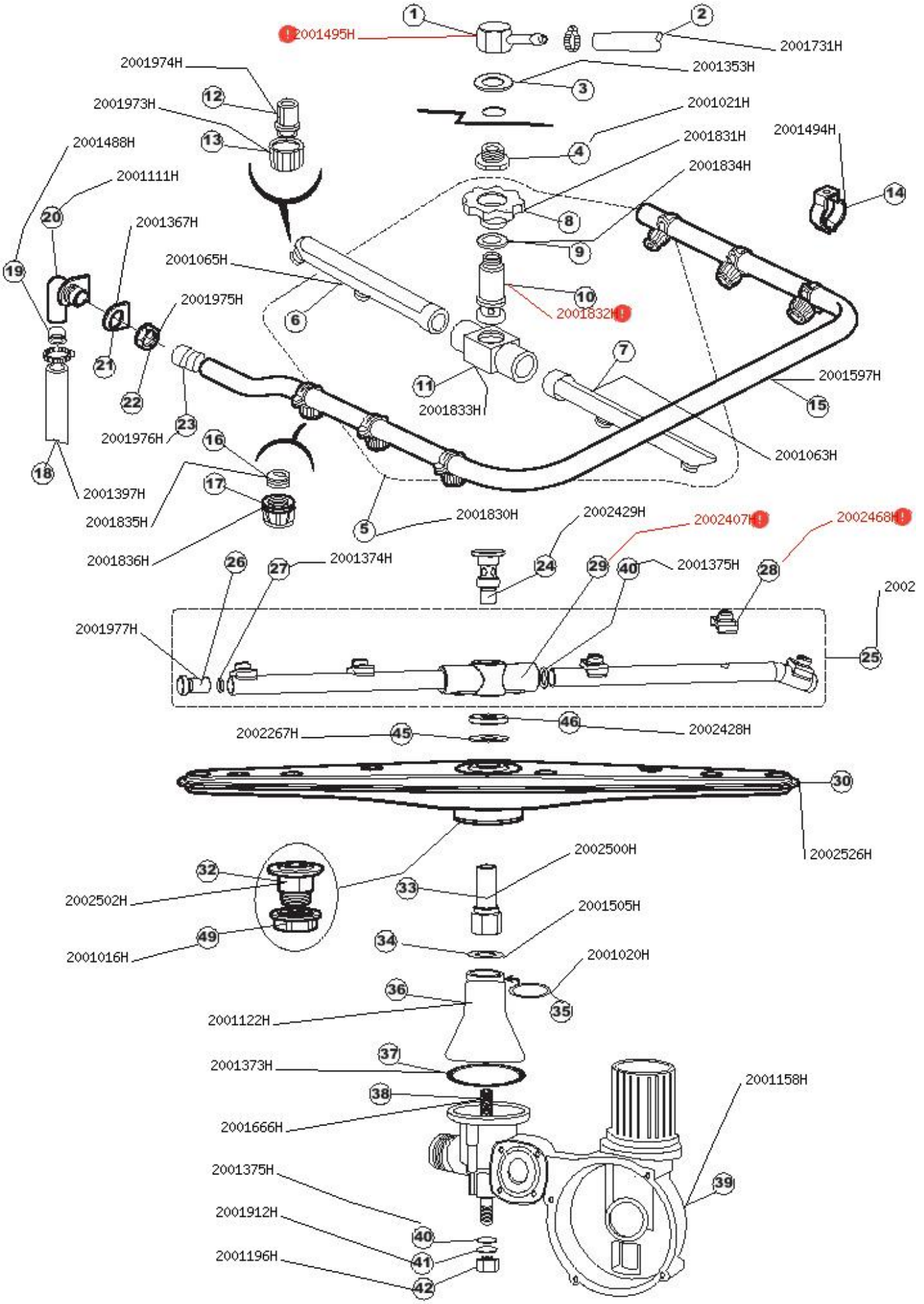
1
2001495H
2
2001731H
2001353H
3
2001974H
12
2001973H
13
2001021H
4
2001831H
2001494H
2001488H
2001834H
14
2001111H
20
8
2001367H
9
19
2001065H
10
2001832H
2001975H
6
21
7
22
11
2001597H
2001833H
15
23
2001976H
16
2001063H
18
17
2001397H
2001835H
5
2001830H
2002429H
2002407H
2002468H
2001836H
26
27
2001374H
24
29
40
2001375H
28
2002
2001977H
25
46
2002267H
45
2002428H
30
2002526H
2002500H
32
33
2002502H
2001505H
49
34
2001016H
2001020H
36
35
2001122H
37
2001373H
2001158H
38
2001666H
2001375H
39
2001912H
40
2001196H
41
42

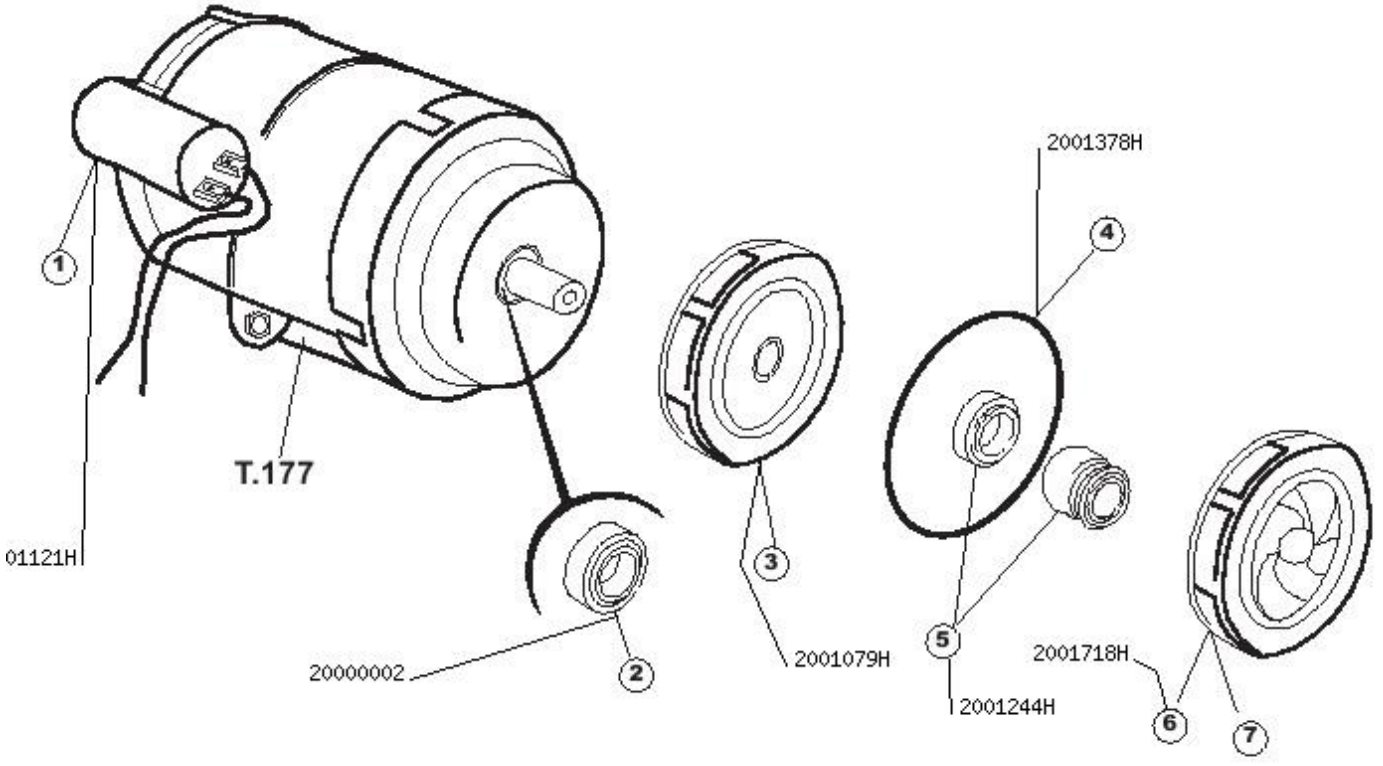
1
01121H
T.177
20000002
2
3
2001079H
2001378H
4
5
2001244H
2001718H
6
7

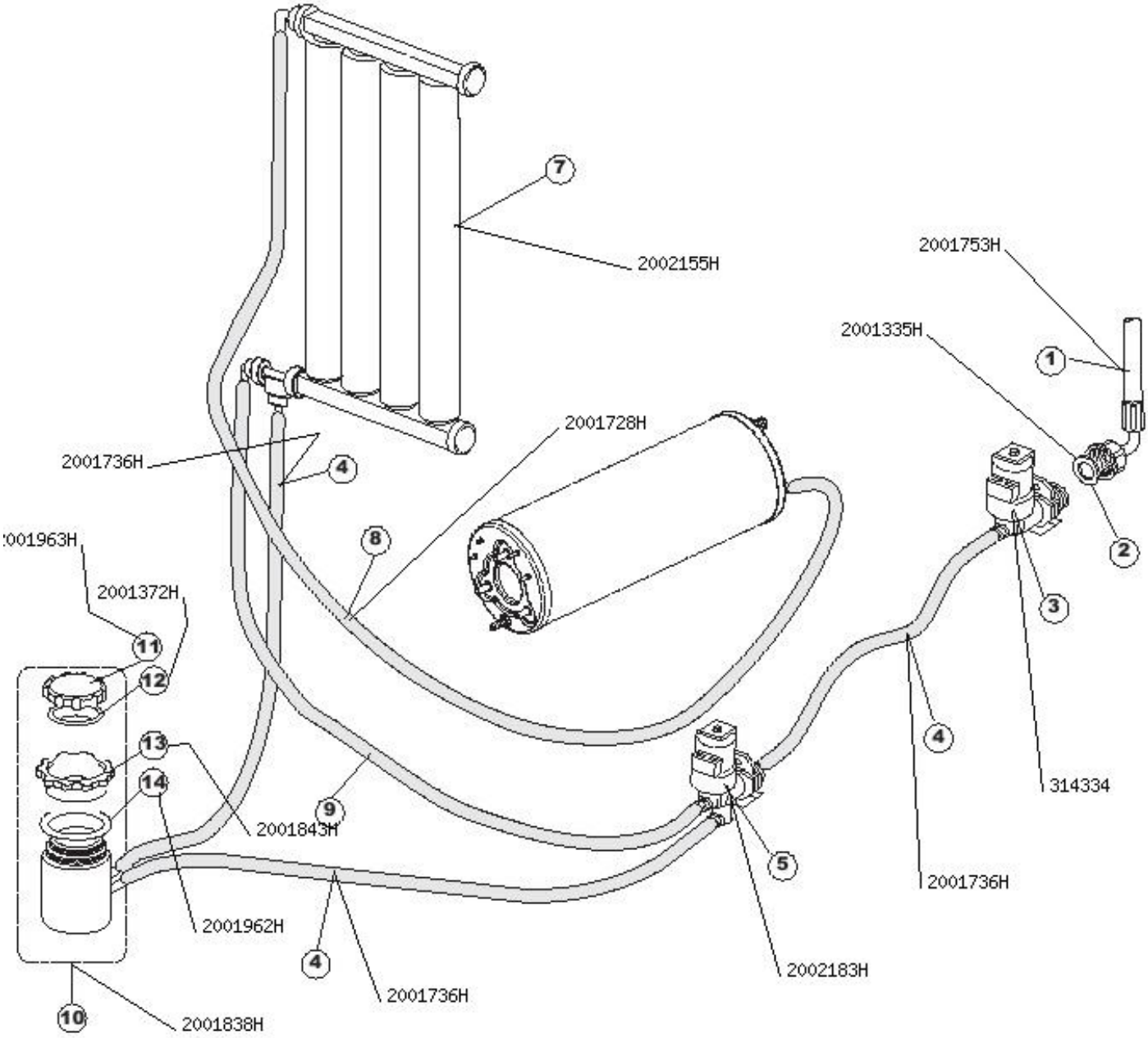
7
2002155H
2001753H
2001335H
1
2001728H
2001736H
4
8
2
3
:001963H
2001372H
11
12
13
14
9
2001843H
5
4
314334
2001736H
2001962H
4
2002183H
2001736H
10
2001838H