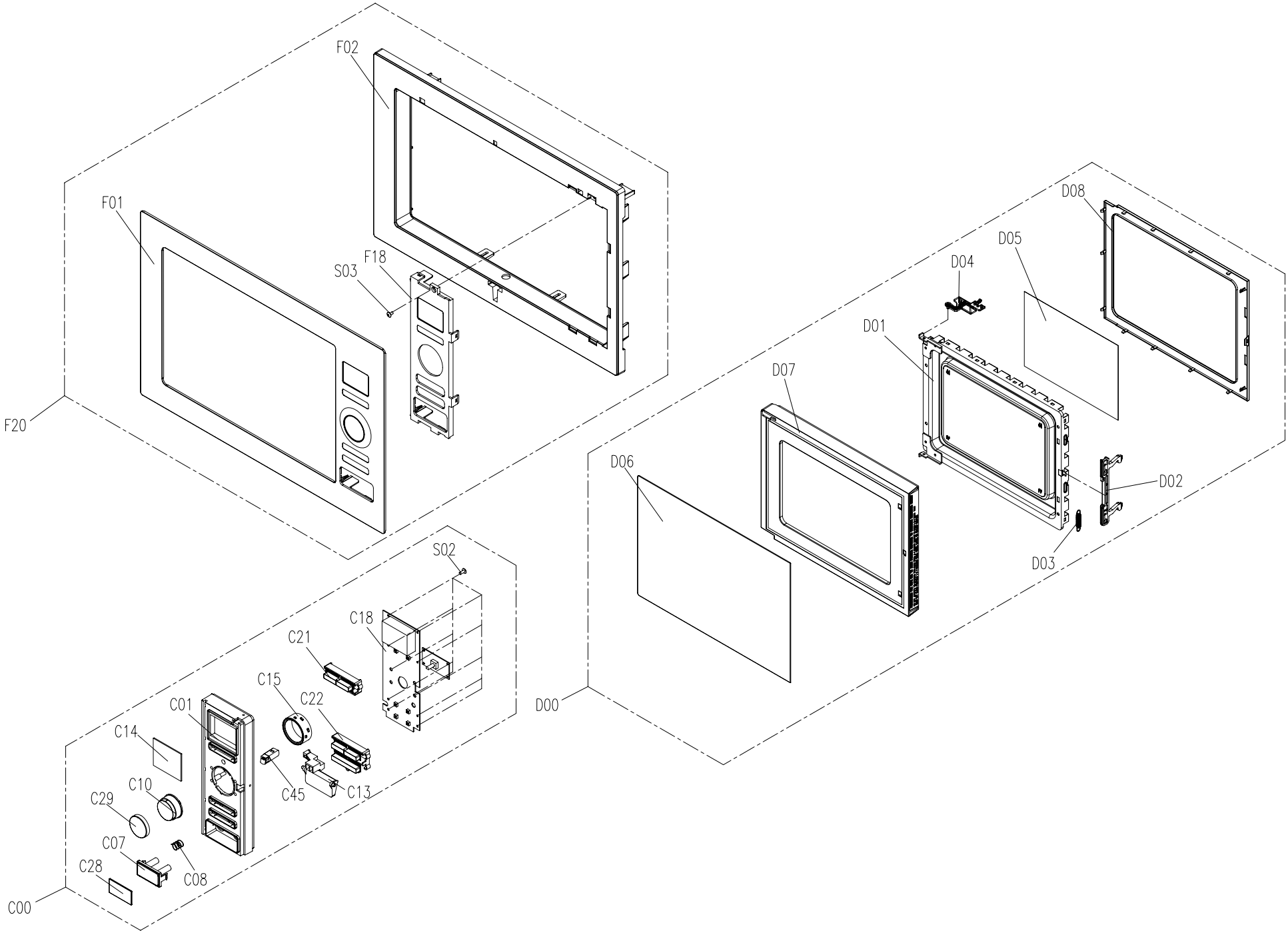
F02
F01
F18
S03
F20
D08
D05
D04
D01
D07
D06
D02
D03
D00
S02
C18
C21
C15
C22
C01
C14
C10
C29
C07
C28
C08
C45
C13
C00

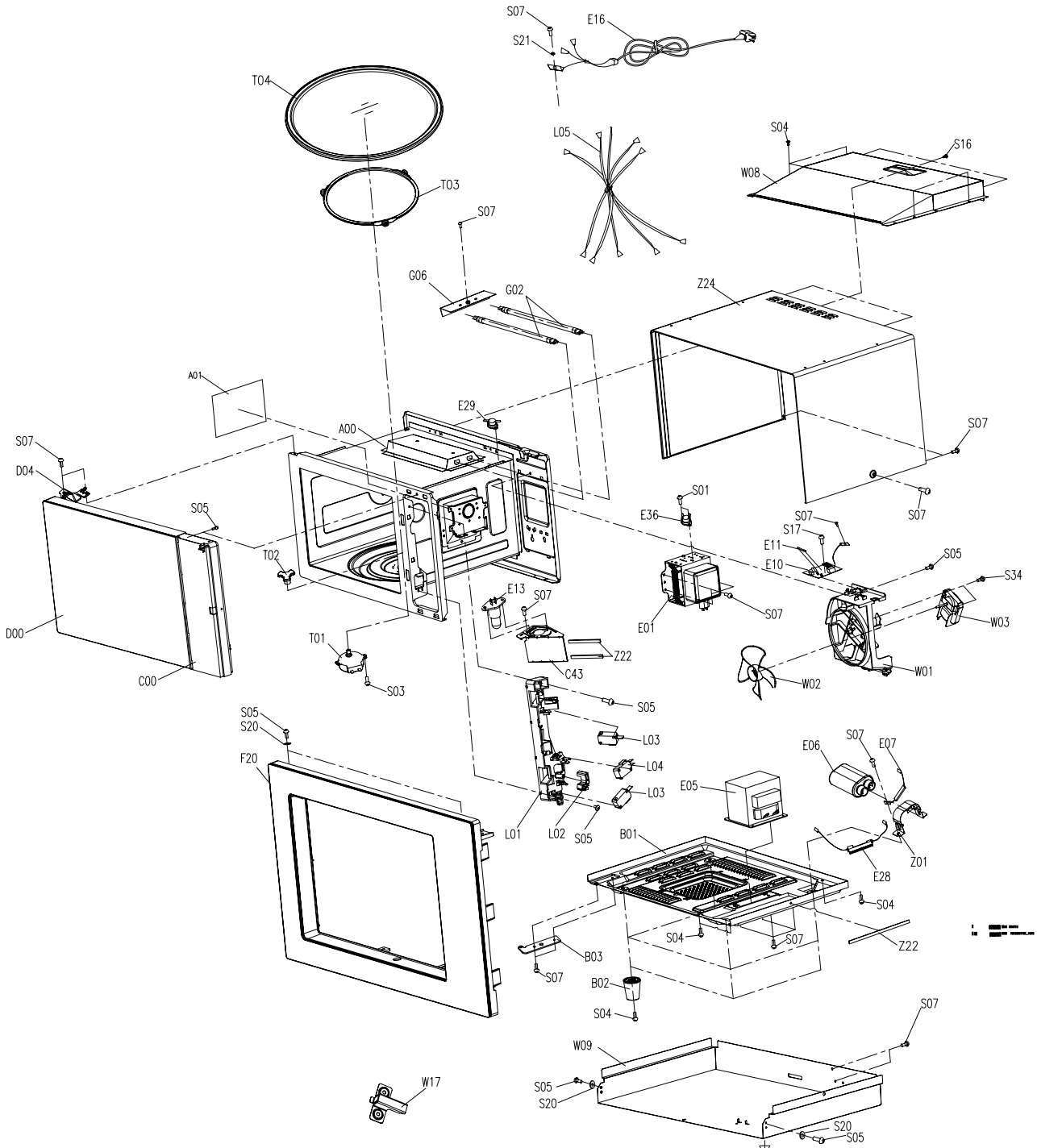
S07
E16
S21
T04
L05
S04
S16
W08
T03
S07
G06
G02
Z24
A01
E29
A00
S07
D04
S07
S05
S01
E36
S07
S17
E11
E10
S05
S34
T02
E13
S07
E01
S07
W03
D00
T01
Z22
C43
W01
C00
S03
W02
S05
S05
S20
L03
F20
L04
E06
S07
E07
E05
L03
L01
L02
S05
B01
Z01
E28
S04
S04
S07
Z22
B03
S07
B02
S04
S07
W09
W17
S05
S20
S20
S05