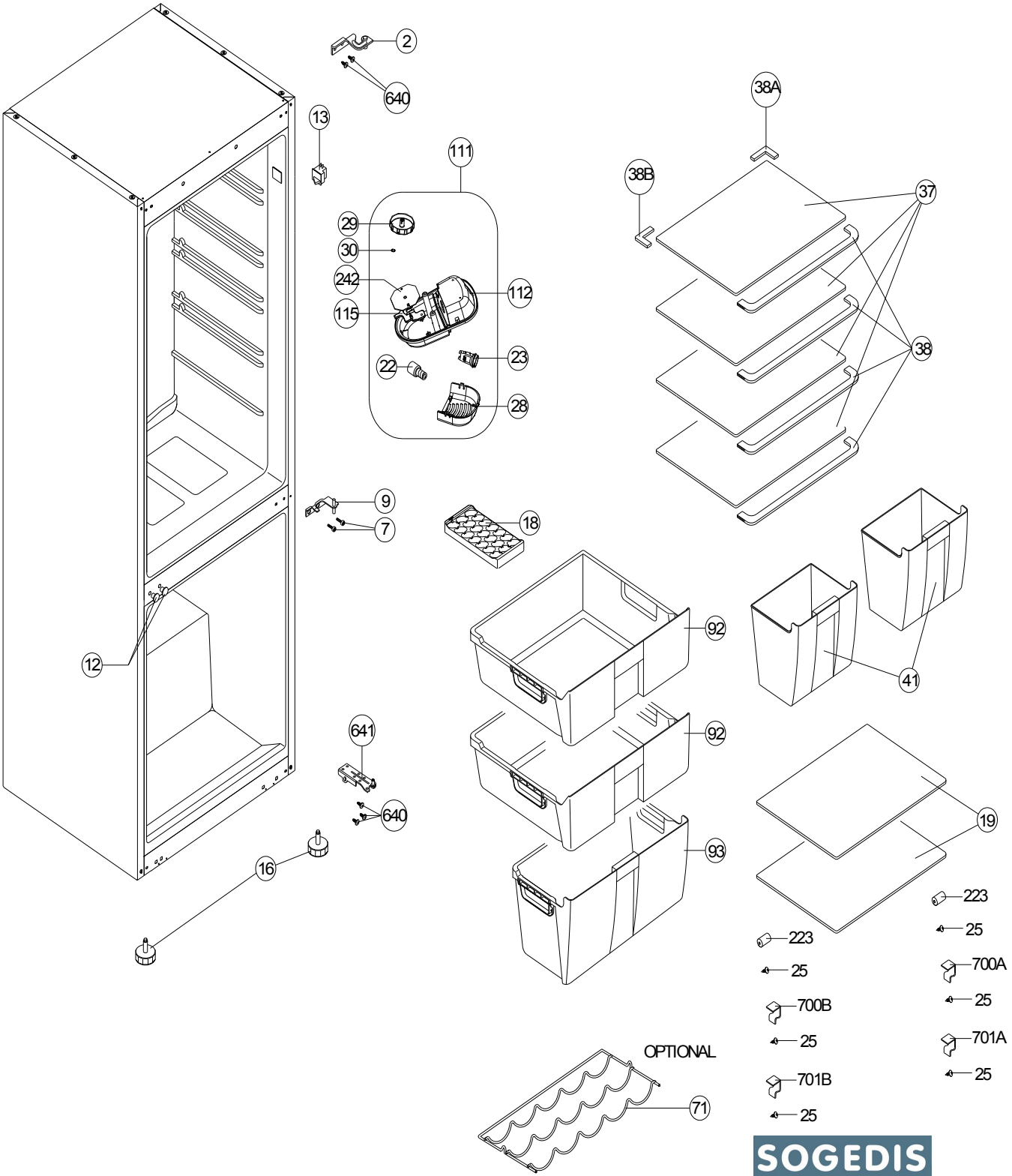

SOGEDIS ELECTROMENAGER

SEPTEMBER 2017

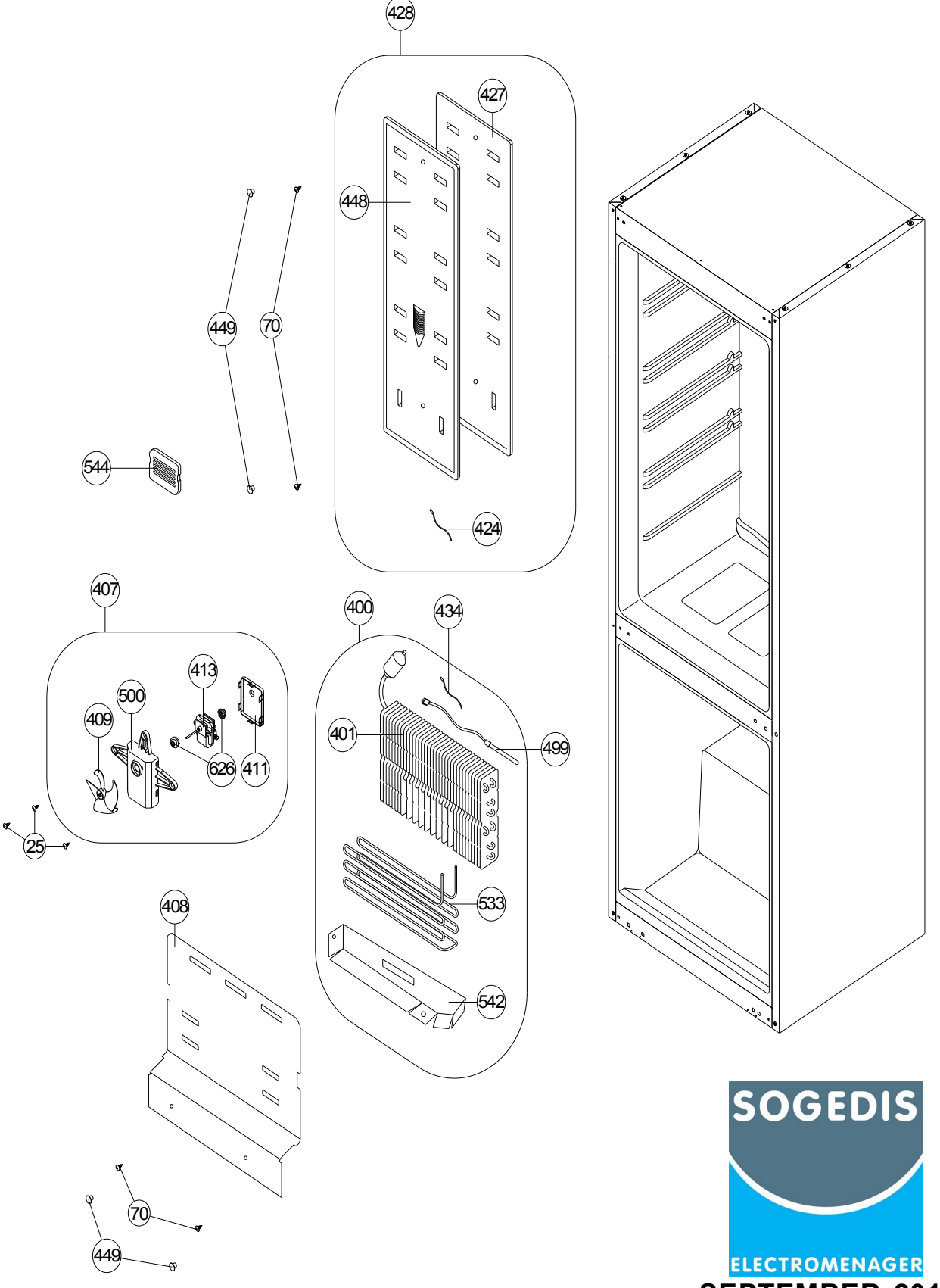

SOGEDIS ELECTROMENAGER

SEPTEMBER 2017

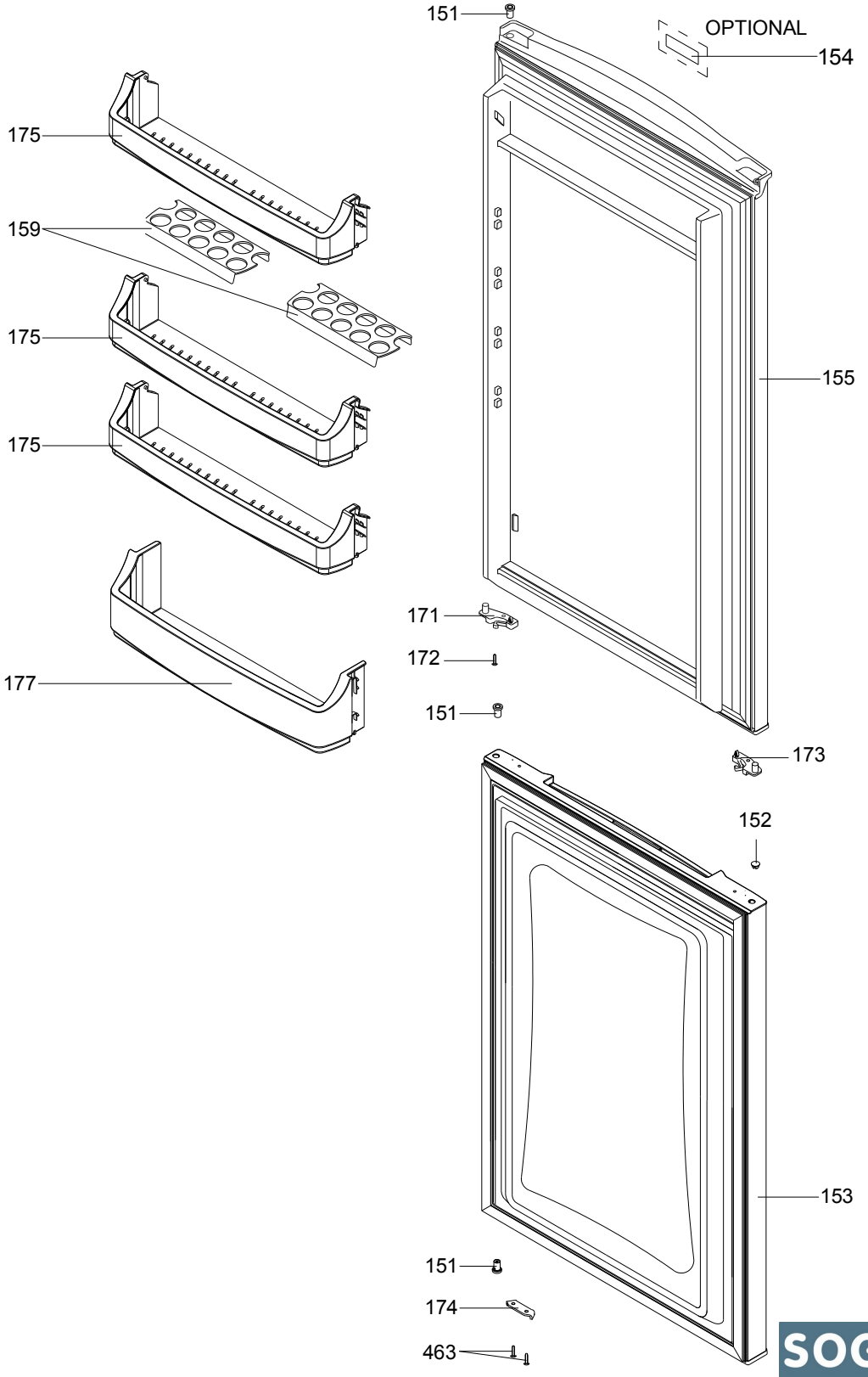

SEPTEMBER 2017

SOGEDIS ELECTROMENAGER

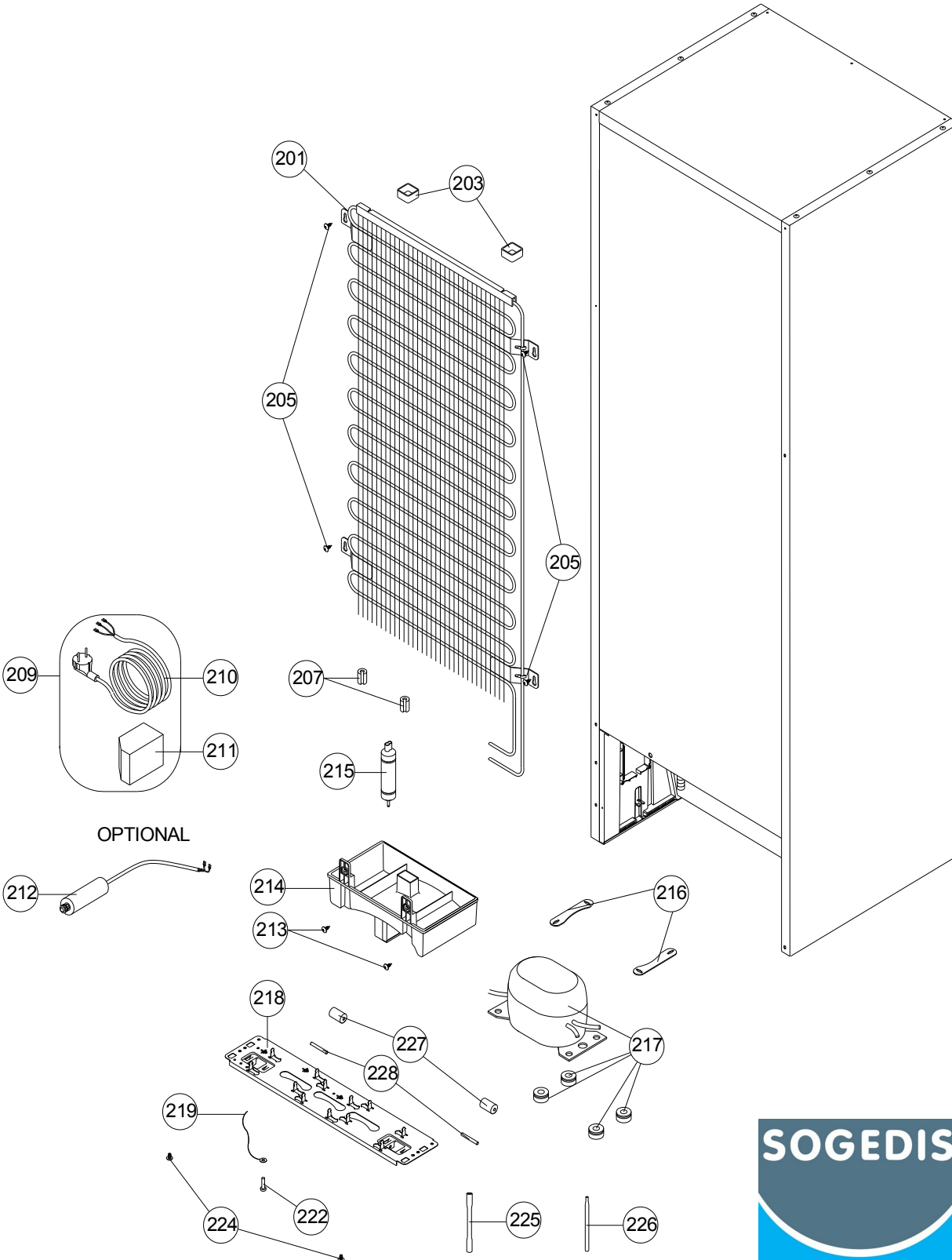

SOGEDIS ELECTROMENAGER

SEPTEMBER 2017