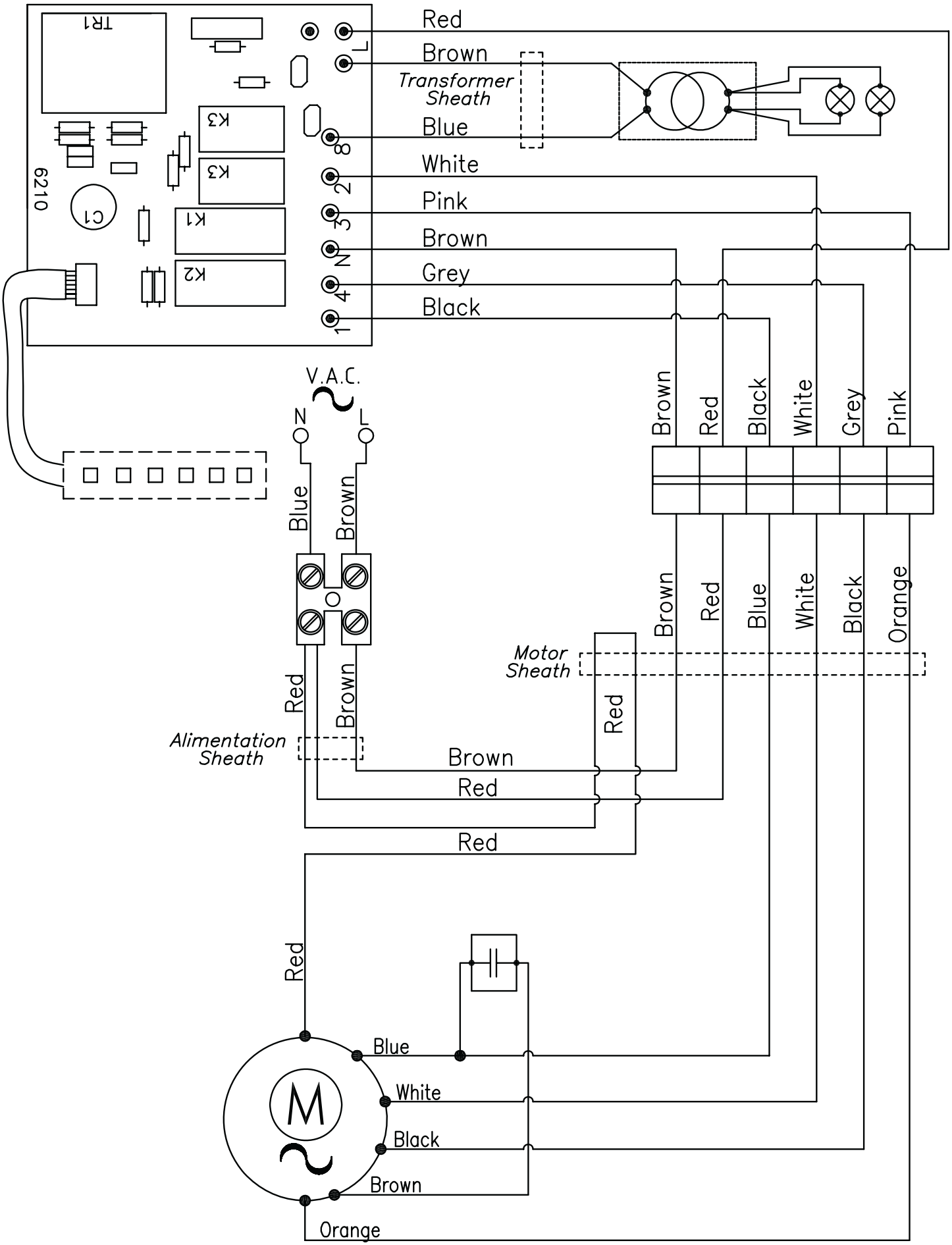
TR1
K3
K3
K1
K2
C1
6210
L
8
2
3
N
4
1
Red
Brown
Transformer Sheath
Blue
White
Pink
Brown
Grey
Black
V.A.C.
N
L
Blue
Brown
Red
Brown
Alimentation Sheath
Brown
Red
Red
Red
Motor Sheath
Red
Brown
Red
Blue
White
Black
Orange
Brown
Red
Black
White
Grey
Pink
Red
Blue
White
Black
Brown
Orange
M