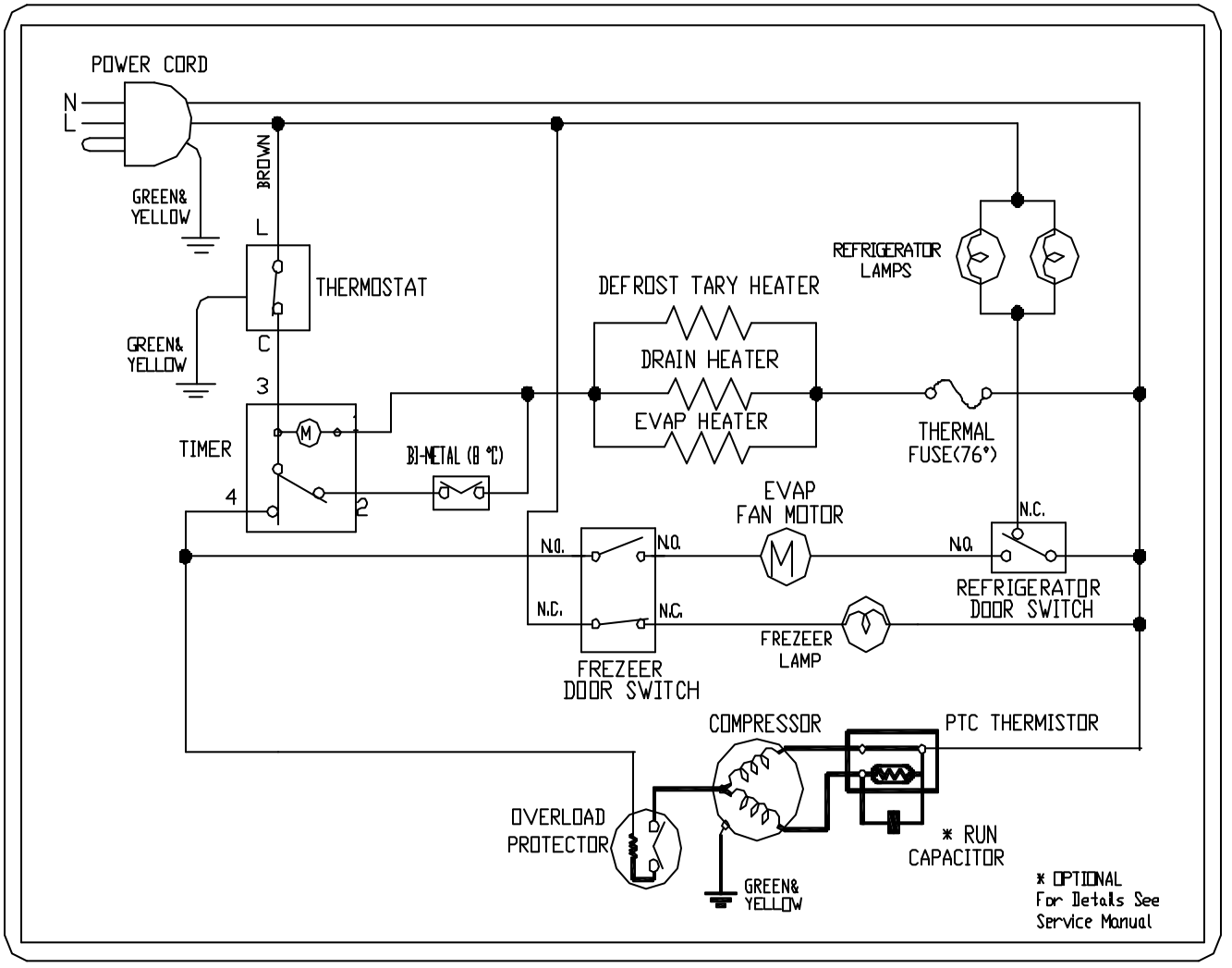CIRCUIT DIAGRAM / GN-GT 465M/540M/640M
(STATIC-WITH FREEZER LAMP)
(PART CODE : 52002777)